Tube-Line Bale Wrapper

TLR 5000ECV

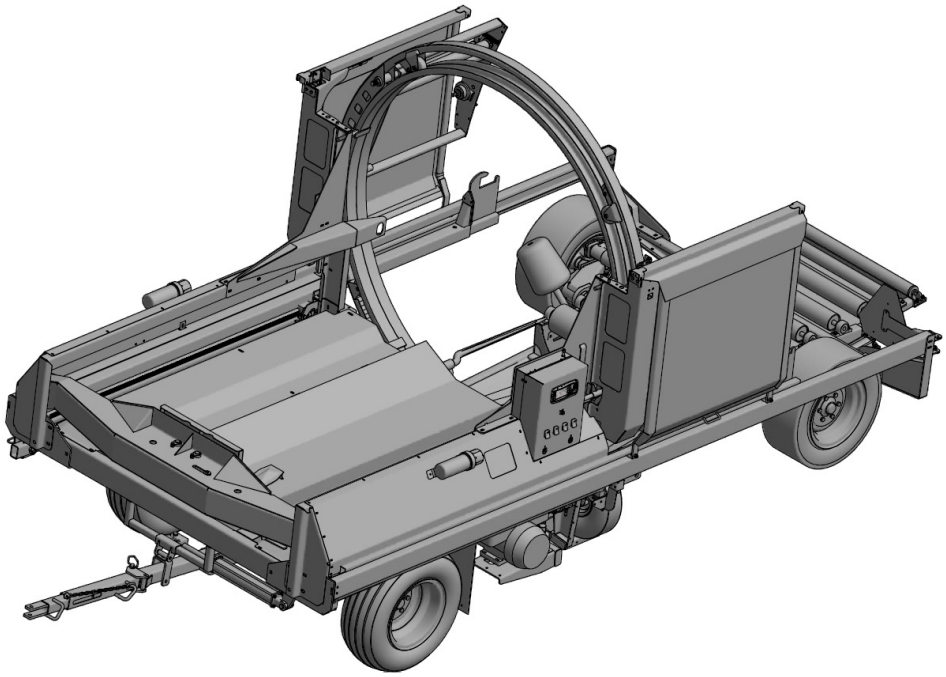

Parts Manual

TUBE•LINE™ MANUFACTURING LTD

32640 (08/31/18)

Parts Manual

Thank you for choosing the Tubeline TLR5000ECV Bale Wrapper. Our hope is that it will give you many years of productive service. This machine is designed to wrap a continuous line of round bales in a film of plastic.

Warranty and Limitation of Liability

All equipment is sold subject to mutual agreement that it is warranted by the company to be free from defects of materials and workmanship. But the company shall not be liable for special, indirect or consequential, damages of any kind under this contract or otherwise. The company's liability shall be limited exclusively to replacing or repairing without charge, at its factory or elsewhere, at its discretion.

Any material, or workmanship defects which become apparent within one year from the date on which the equipment was purchased, and the company shall have no liability for damages of any kind. The buyer by the acceptance of the equipment will assume all liability for any damages, which may result from the use or misuse by his employees or others.

Warranty coverage is null and void unless Warranty Registration form has been completely filled in and is on file at Tube-Line Manufacturing Ltd.

Serial Number Decal

The implement serial number is located on the front of the frame.

This number helps us to track changes and improvements and must be mentioned when ordering parts or requesting service. For your convenience, a space has been provided inside the front cover of this manual to record the serial number, model number, purchase date, and dealer name.

Model Number : _____

Serial Number: _____

Date Purchased : _____

Dealer Name : _____

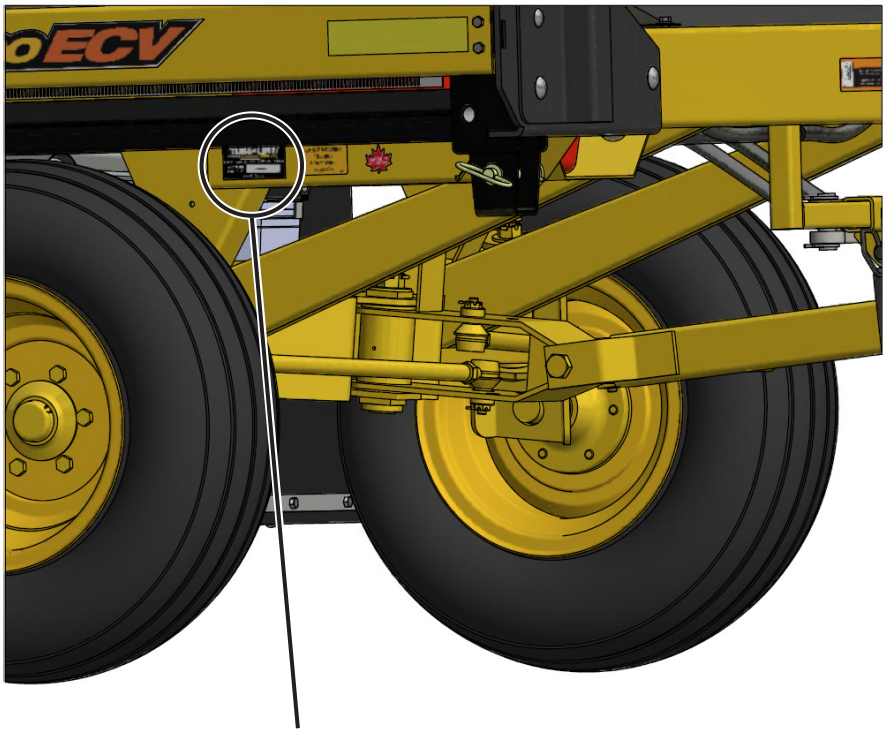

Serial Plate Location, or refer to *Pg.1-1*

Table of Contents

Parts Manual . . . . . **II**

Warranty and Limitation of Liability II
Serial Number Decal III

Section 1 : Safety Decals **1-1**

Safety Decal Locations 1-1
Safety Decal Illustrations 1-3

Section 2: Parts Lists **2-1**

Hoop - Original 2-2
Hoop - Current 2-4
Plastic Wrap Carrier 2-6
Front Pushoff 2-8
Ram 2-10
Hoop Drive 2-12
Hoop Brace - Original 2-14
Hoop Brace - Current 2-16
Safety Guard - Original 2-18
Safety Guard - Current 2-20
Cylinder Supports 2-22
Axle-Spindle-Hub 2-24
Front Axle 2-26
Front Corner - Steering 2-28
Rear Corners 2-30
Rear Axle & Roller Bed 2-32
TL109-100-360 - Brake Assembly 2-34
Gas Tank - Fenders - Original 2-36
Gas Tank - Fenders 2-38
Oil Tank 2-40
Filter Cross Reference 2-41
Throttle Linkage 2-42
13 hp Engine 2-44
20 hp Engine 2-46
Film Snap 2-48

Section 3: Hydraulics **3-1**

Front Circuits 3-2
Rear Circuits 3-4
Manifold Ports 3-6
Manifold Valves 3-8

Section 4: Electrical **4-1**

Main Electrical Harness 4-2
Battery 4-4
Control Panel 4-6
Table Trigger 4-8

Section 5: Optional Features 5-1
TLHPD5000ECV - Single Power Drive 5-2
TLHPDD5000ECV - Dual Power Drive Hydraulics 5-4
Single Power Drive Assembly. 5-6
Dual Power Drive Assembly 5-6
Power Drive Manifold Ports 5-8
Power Drive Manifold Valves 5-10
TLNWLK-ECV - Night Light Kit 5-12
TLNWLKLED-ECV Night Light Kit 5-14
TLGR - Guide Roller Kit 5-16
TLGSECV - Laser Guidance System 5-18
TLPSSK - Plastic Sensor Shutdown Kit 5-20
Plastic Sensor Shutdown Kit Installation 5-21
Plastic Sensor Shutdown Kit Wire Adjustment 5-21
TLTWK - Twin Wrap Kit 5-22
TLMPO-5000 - Dispatch Arm 5-24
Imperial Torque Values VI
Metric Torque Values. VII

Intentionally Left Blank

Section 1 : Safety Decals

Safety Decal Locations

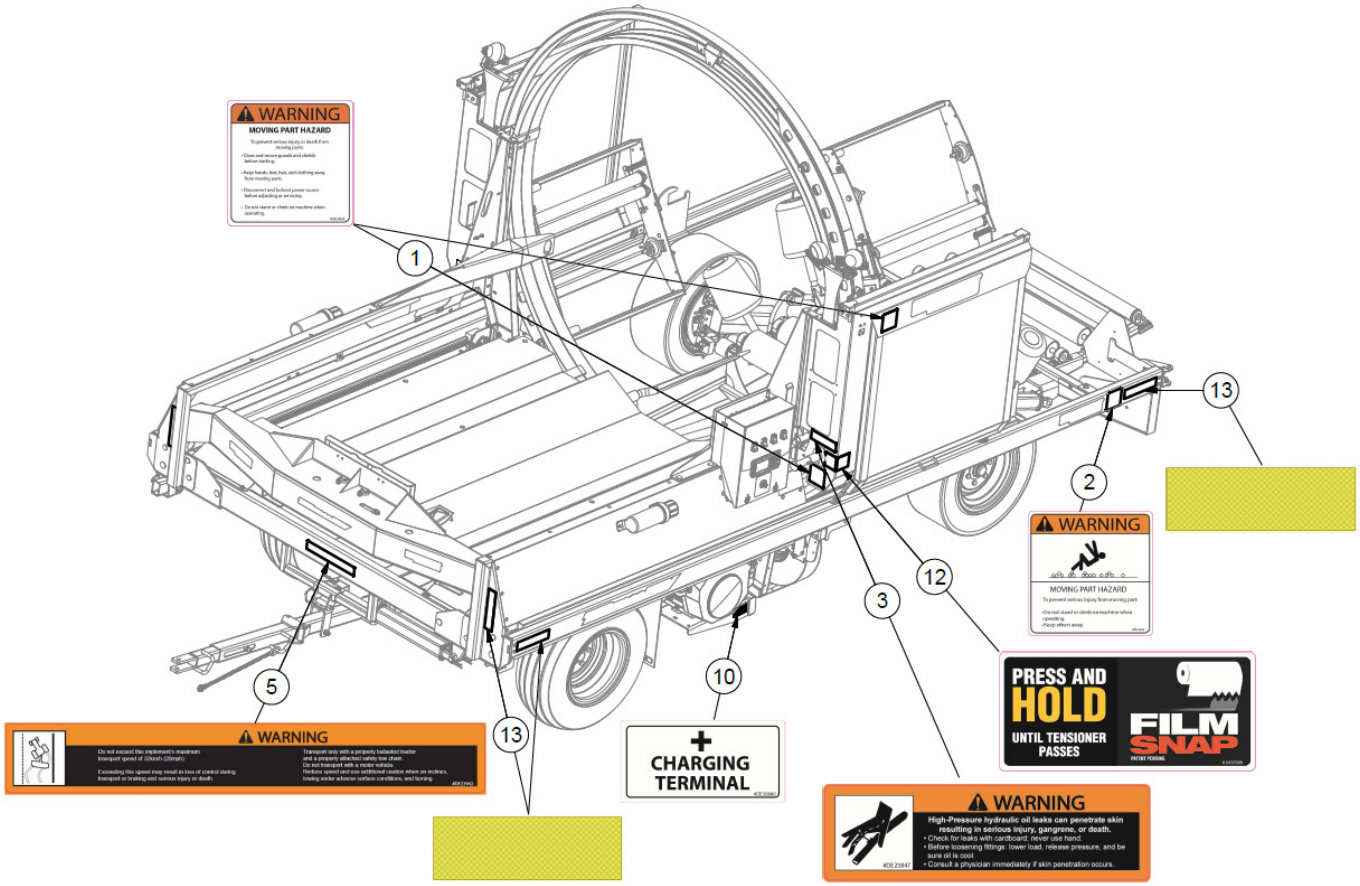

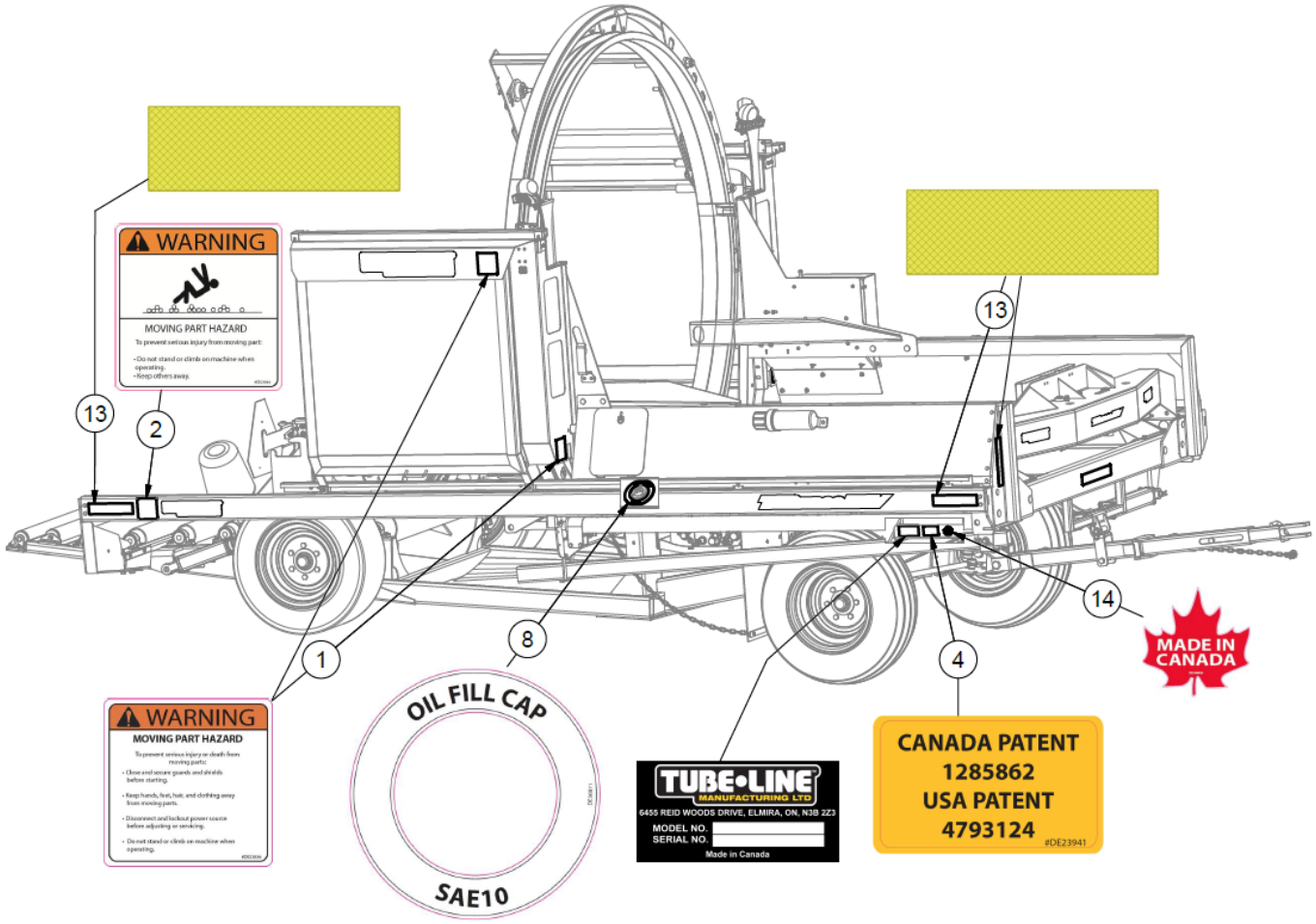

Safety Decal Locations

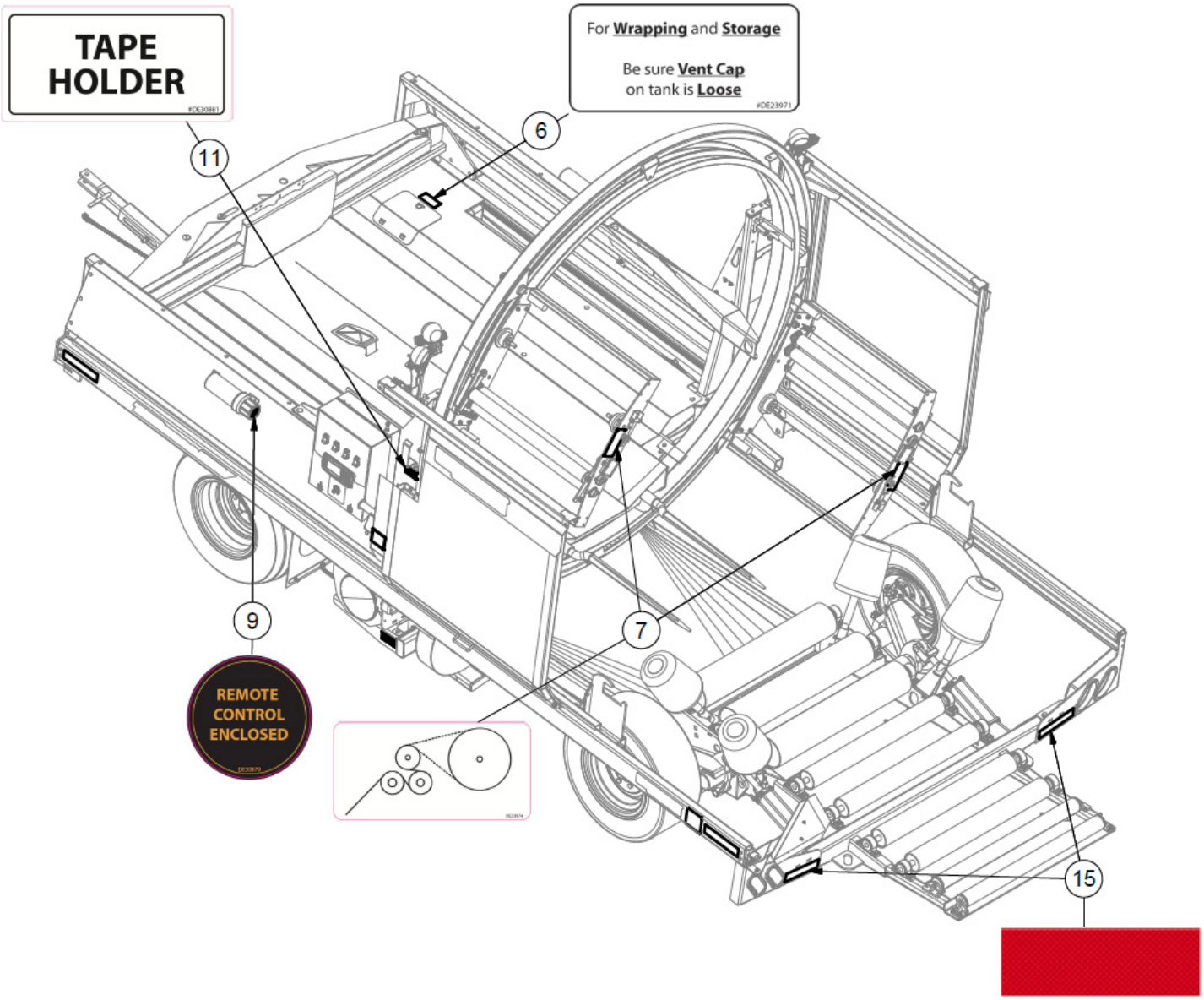

ITEM	QTY	PART NUMBER	DESCRIPTION
1	4	DE23836	Moving Part Hazard Text Decal
2	2	DE23846	Warning Moving Part Hazard (Rollers)
3	1	DE23847	High Pressure Fluid Warning Decal
4	1	DE23941	Canada/USA Patent Decal
5	1	DE23942	Warning - Max. Transport Speed Decal
6	1	DE23971	Wrapping and Storage Decal
7	2	DE23974	Wrap Instruction Decal
8	1	DE30871	Decal for Hydraulic Oil Fill on Wrappers
9	1	DE30879	Decal - Remote Control Enclosed
10	1	DE30880	Decal - Charging Terminal
11	1	DE30881	Decal - Tape Holder
12	1	DE37509	Decal for Film Snap
13	6	DEAMBER	Amber Reflective Strip Decal
14	1	DECANADA	Decal Made In Canada
15	2	DERED	Red Reflective Strip Decal

Safety Decal Illustrations

ITEM: 1

PART NO: DE23836

ITEM: 2

PART NO: DE23846

ITEM: 3

PART NO: DE23847

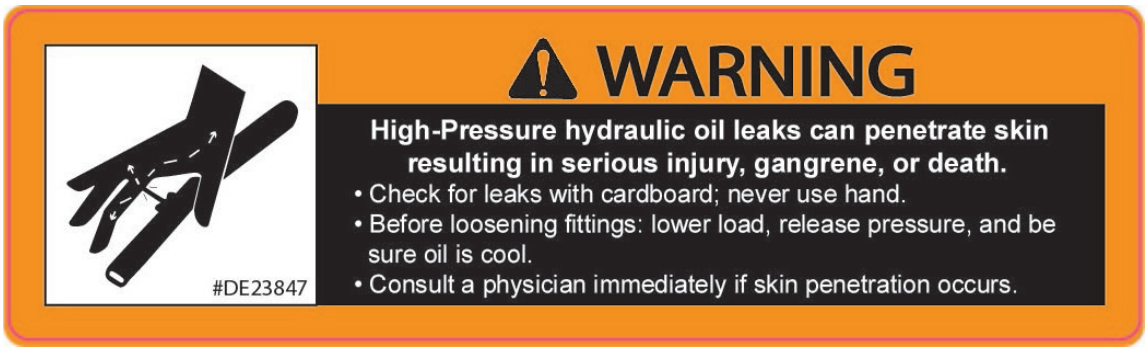

ITEM: 4

PART NO: DE23941

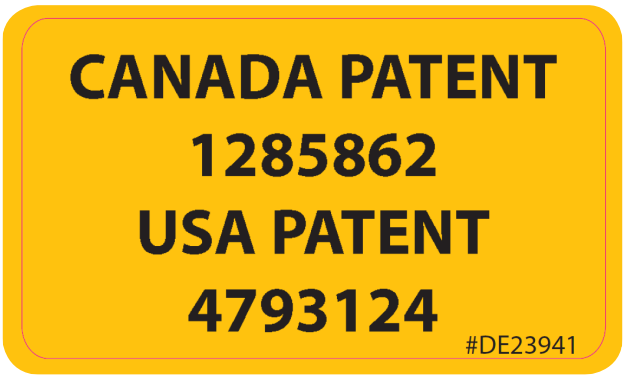

ITEM: 5

PART NO: DE23942

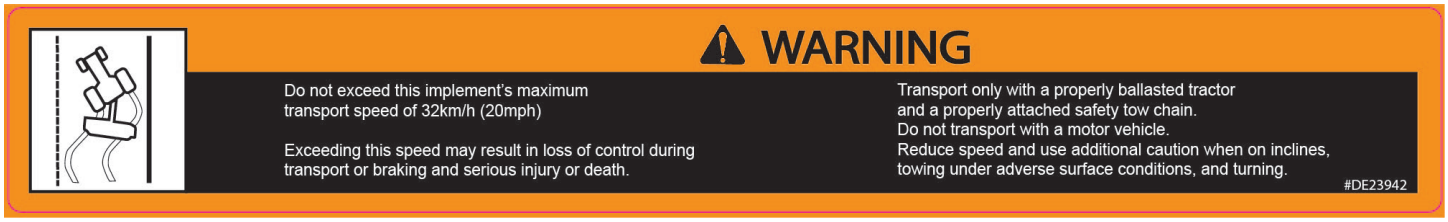

Safety Decal Illustrations

ITEM: 6

PART NO: DE23971

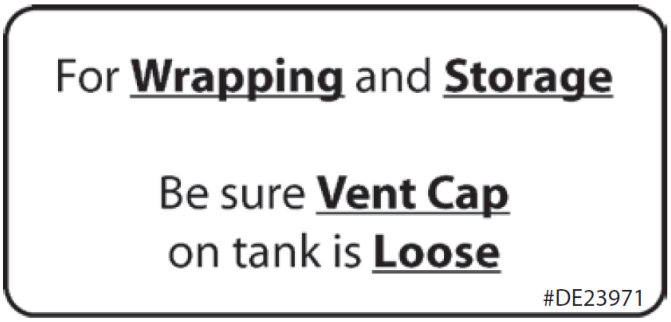

ITEM: 7

PART NO: DE23974

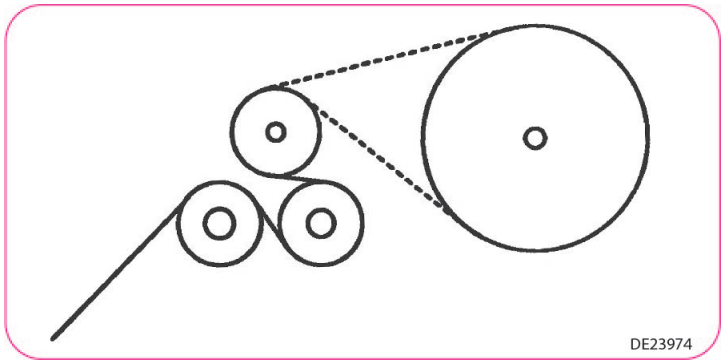

ITEM: 8

PART NO: DE30871

ITEM: 9

PART NO: DE30879

ITEM: 9

PART NO: DE30880

ITEM: 10

PART NO: DE30881

Safety Decal Illustrations

ITEM: 12

PART NO: DE37509

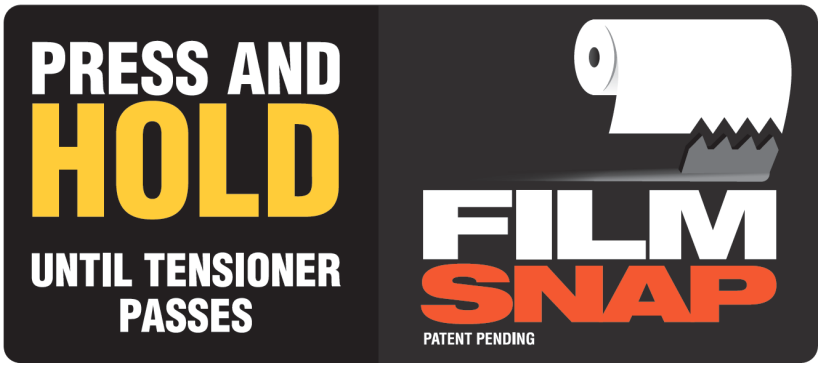

ITEM: 13

PART NO: DEAMBER

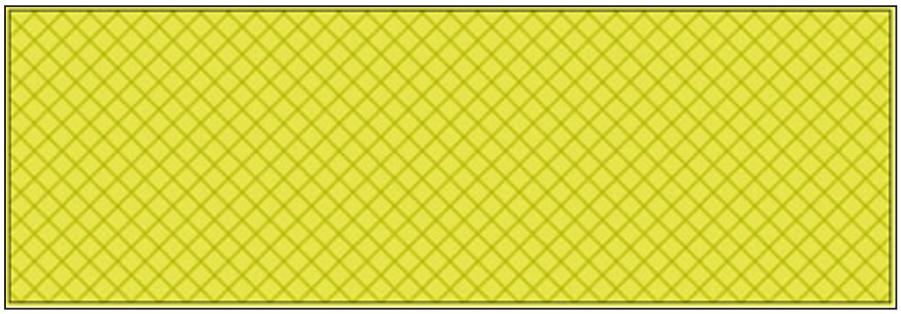

ITEM: 14

PART NO: DECANADA

ITEM: 15

PART NO: DERED

- Keep safety signs clean and legible at all times.
- Replace safety signs that are missing or illegible.
- Decals are available through your dealer.

Section 2: Parts Lists

Actual parts may vary from illustrations

Hoop - Original

For wrappers with a serial number **up to** 16R192

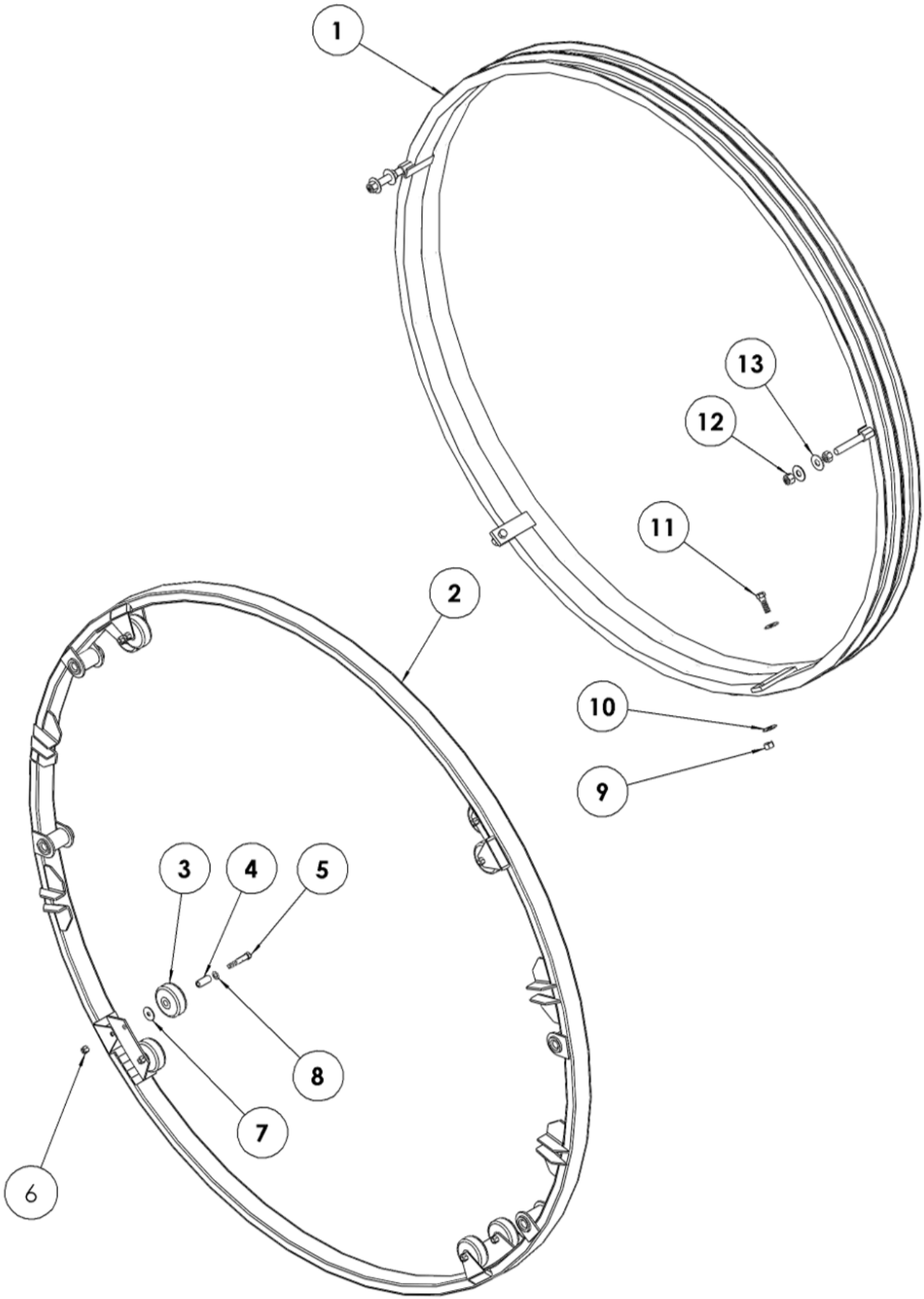

Hoop - Original

For wrappers with a serial number **up to** 16R192

ITEM	QTY	PART NUMBER	DESCRIPTION
1	1	TL550-100-002	Inner Hoop
2	1	TL550-301-001	Outer Hoop
2A		TL5X2-500-101	Complete Outer Hoop (Ref # 2-8)
3	8	TL500-200-014	4” Hoop Wheel
3A		TL5X2-500-102	Complete 4” Hoop Wheel
4	8	TL550-200-016	Spanner
5	8	TL500-100-015	Hoop Wheel Axle Bolt
6	8	LN 1/2	Center Locknuts
7	8	FW 1/2X2.0	Fender Washer 1/2 x 2.0
8	8	FWSAE 1/2	Flatwasher, 1/2” Zinc Plated SAE
9	2	LN 5/8 N	Locknut - 5/8-11 Zinc Plated Nylon Insert Lock Nut
10	4	FW 5/8	Flatwasher - 5/8” Zinc Plated USS (516)
11	2	HB 5/8-11X2.0 B	Hex Bolt 5/8-11 x 2 Grade 5 Plain Finish Hex Cap Screw
12	4	LN 3/4 N	Locknuts - 3/4-10 Zinc Plated Nylon Insert
13	4	FW 3/4	Flatwasher Plated - 3/4” Zinc Plated USS (400)

Hoop - Current

For wrappers with a serial # **from** 16R235 **to** current

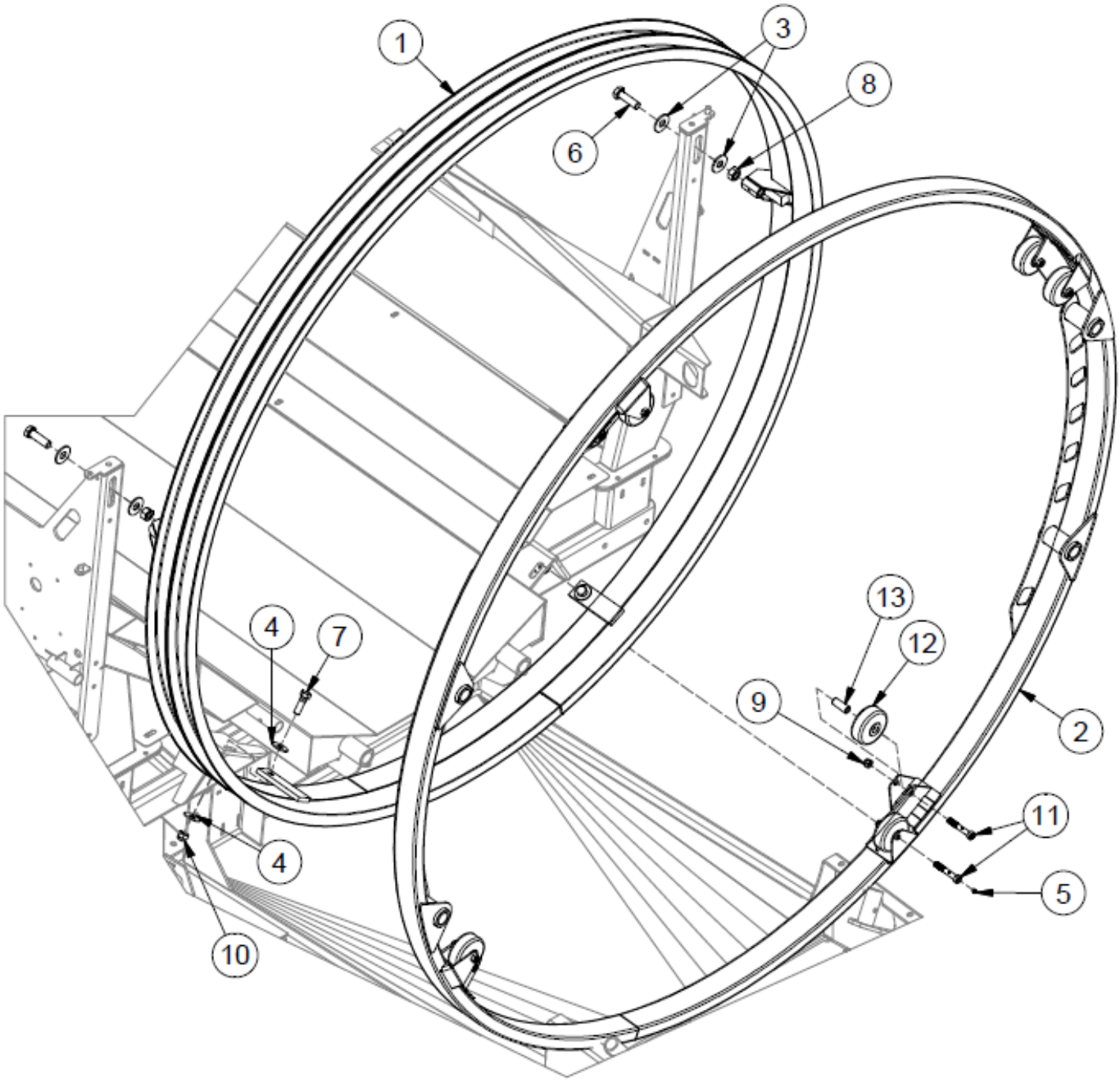

Hoop - Current

For wrappers with a serial # **from** 16R235 **to** current

ITEM	QTY	PART NUMBER	DESCRIPTION
1	1	39532	Large 5000 Inner Hoop
2	1	39537	Large Outer Hoop
3	4	FW 3/4	Flatwasher Plated - 3/4” Zinc Plated USS (400)
4	4	FW 5/8	Flatwasher - 5/8” Zinc Plated USS (516)
5	15	GR 1/4 X 28	Grease Fitting 1/4-28 Strght-Standrd Zerk
6	2	HB 3/4-10X2.1/2 YZ8	Hex Bolt 3/4”-10 x 2.5” Grade 8 Yellow Zinc Hex Cap Screw
7	2	HB 5/8-11X2.0 B	Hex Bolt 5/8-11 x 2 Grade 5 Plain Finish Hex Cap Screw
8	2	HN 3/4	Hex Nut - 3/4”-10 Grade 5 Zinc Plated Finished N.C. (325)
9	10	LN 1/2 N	Locknuts - 1/2-13 Zinc Plated Nylon Insert Lock Nut
10	2	LN 5/8 N	Locknut - 5/8-11 Zinc Plated Nylon Insert Lock Nut
11	8	TL500-100-015	Hoop Wheel Axle Bolt
12	8	TL500-200-014	Hoop Wheel, 4” (2001)
13	8	TL550-200-016	Spanner

Plastic Wrap Carrier

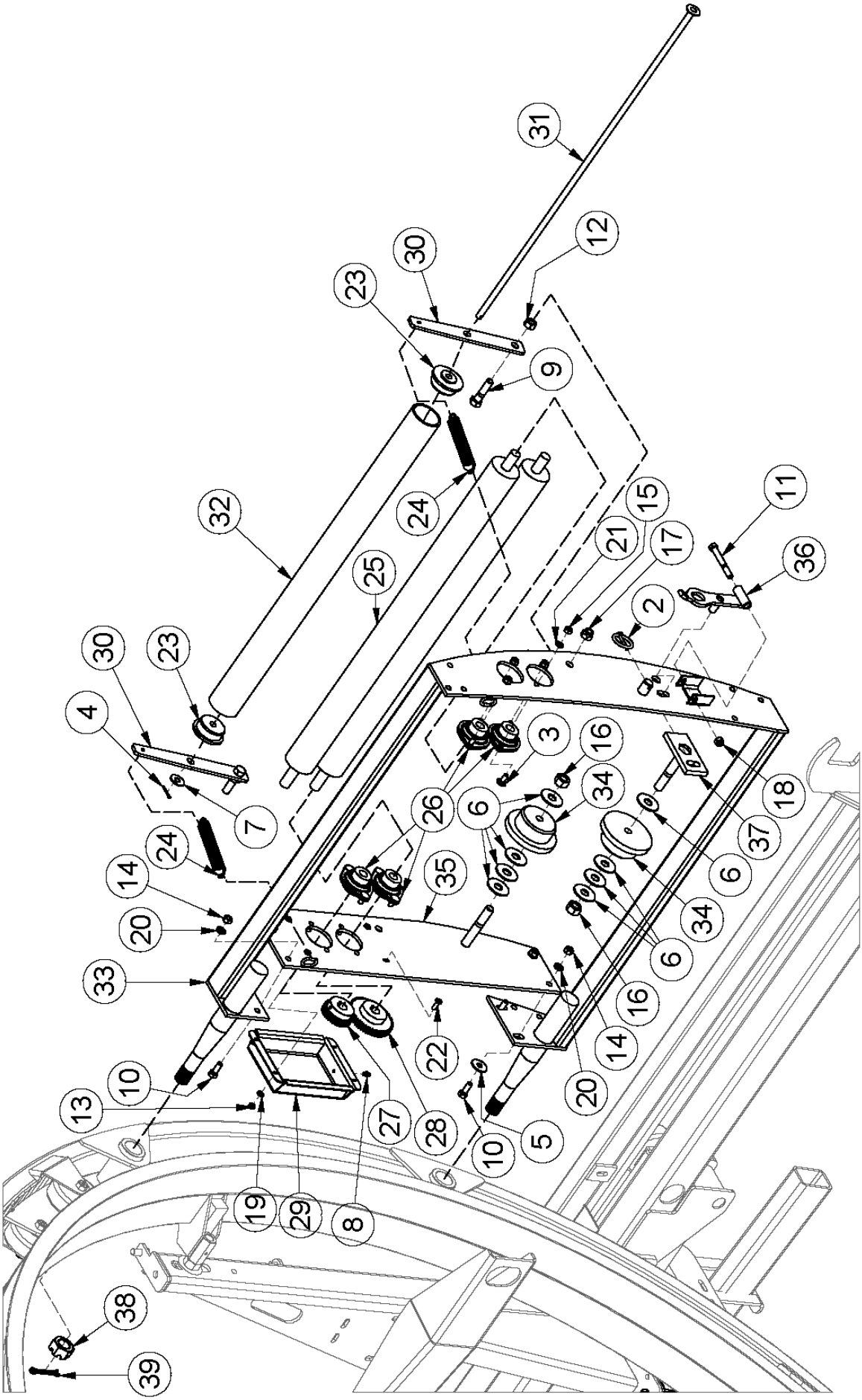

Plastic Wrap Carrier

ITEM	QTY	PART NUMBER	DESCRIPTION
1	2	TL550-100-072	Complete Plastic Wrap Carrier Assembly
2	1	25680	Lynch Pin 3/16 x 1.5
3	8	CB 5/16-18X 3/4 Z5	Carriage Bolt - 5/16-18 x 3/4” Zinc Plated Grade 5
4	1	CP 18X1	Pin, Cotter 1/8 x 1.0
5	2	FW 3/8	Flatwasher Plated, 3/8” Zinc Plated USS (2984)
6	8	FW 5/8	Flatwasher - 5/8” Zinc Plated USS (516)
7	1	FW 7/16	Flatwasher - 7/16” Zinc Plated USS (1620)
8	1	GR 1/4 X 28	Grease Fitting 1/4-28 Strght-Standrd Zerk
9	2	HB 1/2-13X2.0 Z5	Hex Bolt 1/2-13 x 2” Grade 5 Zinc Plated Hex Cap Screw N.C
10	4	HB 3/8-16X1.0 Z5	Hex Bolt 3/8-16 x 1” Grade 5 Zinc Plated Hex Cap Screw N.C.
11	1	HB 3/8-16X3.0 Z5	Hex Bolt 3/8-16 x 3” Grade 5 Zinc Plated Hex Cap Screw N.C
12	2	HN 1/2	Hex Nut 1/2”-13 Grade 5 Zinc Plated Finished N.C.
13	4	HN 1/4	Hex Nut 1/4”-20 Grade 5 Zinc Plated Finished N.C.
14	4	HN 3/8	Hex Nut 3/8”-16 Grade 5 Zinc Plated Finished N.C.
15	8	HN 5/16	Hex Nut 5/16”-18 Grade 5 Zinc Plated Finished Hex Nut N.C.
16	2	HN 5/8	Hex Nut - 5/8”-11 Grade 5 Zinc Plated Finished N.C.
17	2	LN 1/2 N	Locknuts - 1/2-13 Zinc Plated Nylon Insert Lock Nut
18	1	LN 3/8 N	Locknuts - 3/8-16 Zinc Plated Nylon Insert Lock Nut
19	4	LW 1/4	Lockwasher - 1/4” Zinc Plated Medium Split (15000)
20	4	LW 3/8	Lockwasher - 3/8” Zinc Plated Medium Split (5500)
21	8	LW 5/16	Lockwasher - 5/16” Zinc Plated Medium Split (9000)
22	4	MS 1/4X1.1/2 SDS	Machine Screw - 1/4”-14 x 1-1/2” Unslotted Hex Washer Head Self Drilling Screw Z
23	2	TL500-100-021	HMWPVC Bearing - Plastic End Cap
24	2	TL500-100-135	Spring - Tensioner
25	2	TL550-100-006	Tensioner Roller
26	4	TL550-100-007	Flange Bearing, 3/4” (2 Flanges & Bearing)
27	1	TL550-100-008	Small Gear - 3/4 Bore, KW, SS, 14 1/2 deg, 2.25 P.D.
28	1	TL550-100-009	Large Gear - 3/4 Bore, KW, SS, 14 1/2 deg, 3.50 P.D.
29	1	TL550-100-010	Gear Cover
30	2	TL550-100-016	Slave Roller Mount Bracket
31	1	TL550-100-018	Axle Shaft
32	1	TL550-100-022	Pipe, ABS (Plastic Idler)
33	1	TL550-100-089	Main Wrap Bracket
34	2	TL550-200-012	Plastic Wrap Spool
35	1	TL550-200-090	Main Wrap side Insert
36	1	TL550-200-103	Wrap Carrier (Spool) Latch
37	1	TL550-200-115	Spool Holder
38	2	HN 1.0-14NFCASTLE	Hex Nut 1”-14 Slotted Plain Finis(NF Castle Nut Bare)
39	2	CP 1/4 x 2.0	Pin, Cotter - 1/4” x 2” Zinc Plated

Front Pushoff

Note: 42316 added from serial number 1**8R118 to current.**

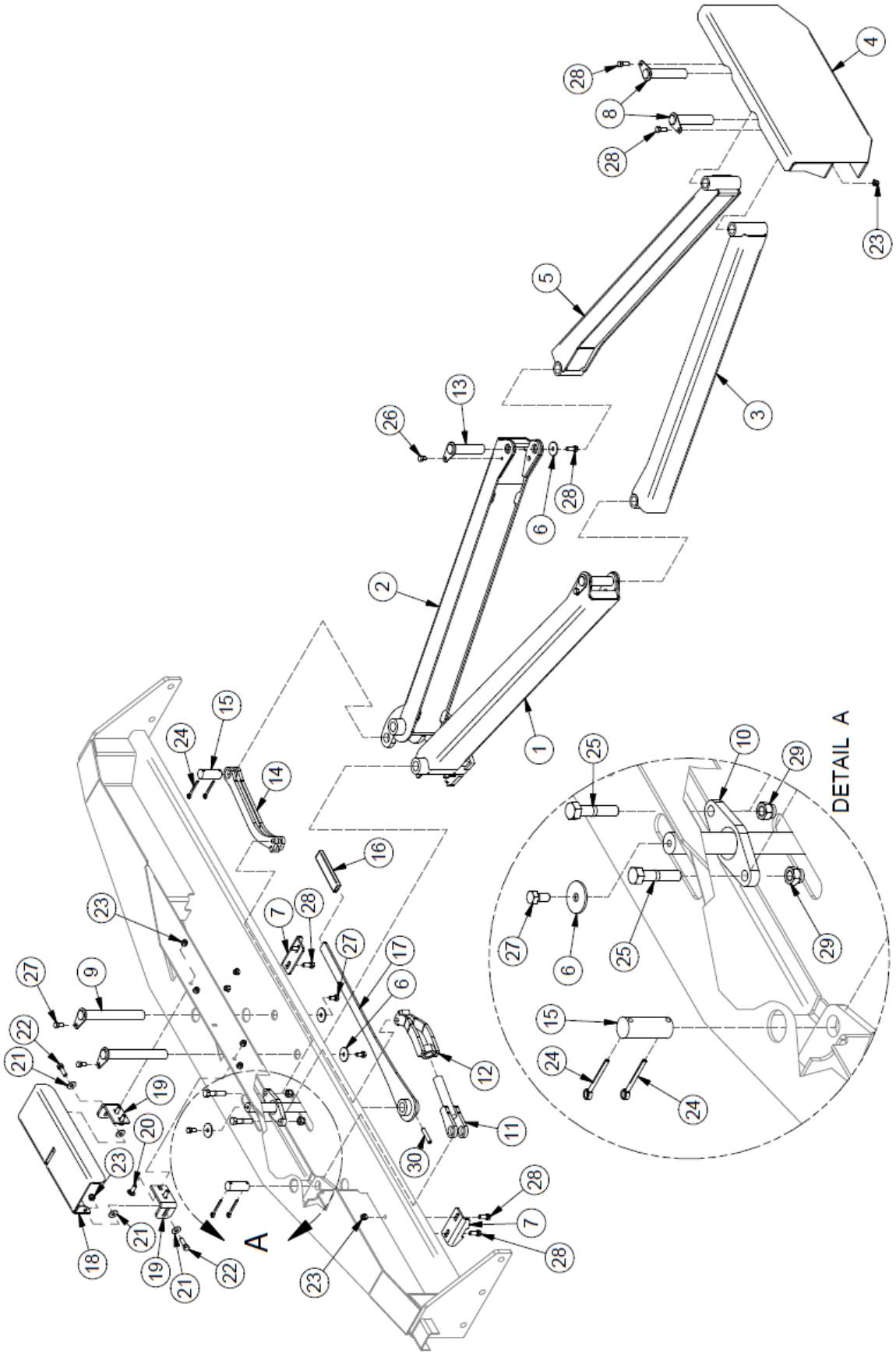

Note: *To order complete ram assembly (includes 30927, see page 2-10), use part number: 31935 (40961* **after** *serial number: 16R234).*

Note: *Wrappers prior to serial number 14R001 require both item 11 & 12 when replacing.*

Front Pushoff

Note: 42316 added from serial number 1**8R118 to current.**

ITEM	QTY	PART NUMBER	DESCRIPTION
1	1	30455	Left Large Arm
2	1	30456	Right Large Arm
3	1	30457	Left Small Arm
4	1	30459	Push Plate
5	1	30462	Right Small Arm
6	5	30924	Pin Washer
7	2	30958	Handle Holder
8	2	30980	Last Pushoff Plate Pin
9	2	30982	Pushoff Middle Pin
10	1	30983	Linkage Pivot
11	1	30985	Linkage Adjuster
12	1	30986	Pivot Adjuster
13	2	30988	Arm Joint Pin
14	1	30989	Solid Pivot Arm
15	2	30993	Ram Linkage Mount Pin
16	1	22707	Rubber Handle for 3/8 x 1 Flat Bar
17	1	39487	Last Pushoff Handle (c/w 22707)
	1	42316	Ram Pushoff Home Latch (Items 18-23)
18	1	42204	Ram Latch Bracket
19	2	42205	Ram Latch Pivot Bracket
20	4	CB 3/8-16 X1 Z5	Carriage Bolt - 3/8-16 x 1” Grade 5 Zinc
21	4	FW 3/8	Flatwasher - 3/8” Zinc Plated USS
22	2	HB 3/8-16X1.25 Z5	Hex Bolt 3/8-16x1 1/4 Grade 5 Zinc Plated Hex Cap Screw
23	12	LN 3/8 N	LN 3/8-16 Zinc Plated Nylon Insert Lock Nut
24	4	CP 3/16 X 1.0	Pin, Cotter 3/16 x 1
25	2	HB 1/2-13X2.25 Z5	Hex Bolt 1/2-13x2 1/4 Grade 5 Zinc Plated Hex Cap Screw
26	2	HB 3/8-16X0.5 Z5	Hex Bolt 3/8-16x1/2 Grade 5 Zinc Plated Hex Cap Screw
27	5	HB 3/8-16X0.75 Z5	Hex Bolt 3/8-16x3/4 Grade 5 Zinc Plated Hex Cap Screw
28	8	HB 3/8-16X1 Z5	Hex Bolt 3/8-16x1 Grade 5 Zinc Plated Hex Cap Screw
29	2	LN 1/2 N	LN 1/2-13 Zinc Plated Nylon Insert Lock Nut
30	1	RP 3/8 x 2	Pin - Roll Pin 3/8 x 2

Note: *To order complete ram assembly (includes 30927, see page 2-10), use part # : 31935 (40961* **after** *serial number: 16R234).*
Note: *Wrappers prior to serial number 14R001 require both item 11 & 12 when replacing.*

Ram

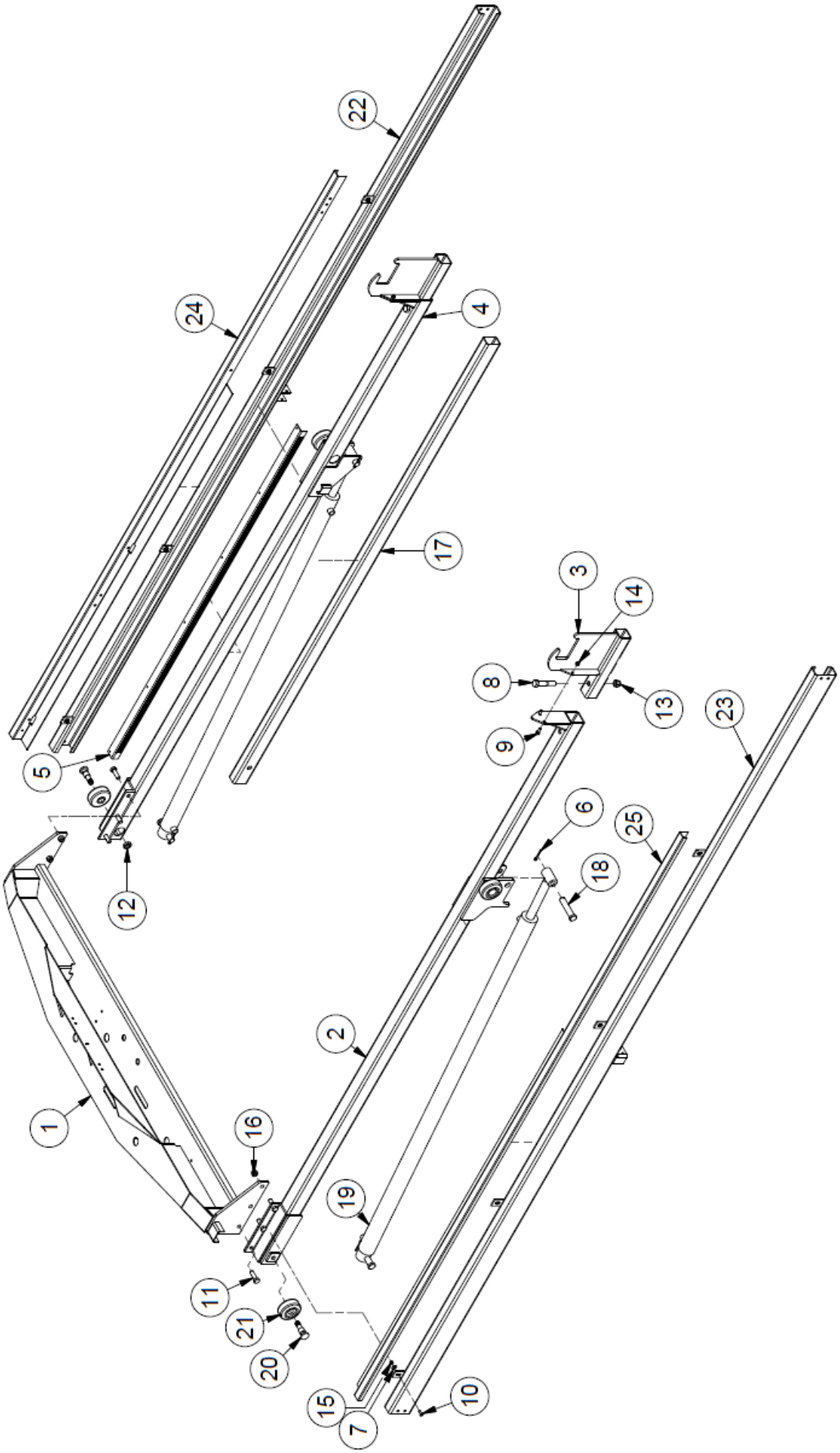

Ram

ITEM	QTY	PART NUMBER	DESCRIPTION	SERIAL BREAK
1	1	30927	Ram	13R001 to 16R234
	1	40830	Large Hoop Ram	16R236 to Current
2	1	30961	Left Side Ram Tube	
3	2	30967	Last Pushoff Tube Holder	
4	1	30991	Right Side Ram Tube	
5	1	31710	Speed Sensor Guide	
6	4	CP 3/16 X 2	Pin, Cotter - 3/16 x 2.0	
7	8	FW 5/16	Flatwasher - 5/16” Zinc Plated USS	
8	2	HB 3/4-10X4 Z5	Hex Bolt 3/4-10x4 Grade 5 Zinc Plated Hex Cap Screw	
9	4	HB 3/8-16X1 Z5	Hex Bolt 3/8-16x1 Grade 5 Zinc Plated Hex Cap Screw	
10	8	HB 5/16-18X1 FHSCS	Hex Bolt - 5/16”-18 x 1” Flat Socket Cap Screw	
11	6	HB 5/8-18 X2 YZ8	Hex Bolt 5/8-18x2 Grade 8 Zinc Hex Cap Screw	
12	4	HN 3/4	Hex Nut - 3/4”-10 Grade 5 Zinc Plated Finished NC	
13	2	LN 3/4 N	LN 3/4-10 Zinc Plated Nylon Insert Lock Nut	
14	4	LN 3/8 N	LN 3/8-16 Zinc Plated Nylon Insert Lock Nut	
15	8	LN 5/16 N	LN 5/16-18 Zinc Plated Nylon Insert Lock Nut	
16	6	LN 5/8 F	Center Locknuts (5/8-18) 2-Way Fine Thread	
17	1	TL500-301-048	Pushoff Tube	
18	4	TL550-100-042	Ram Cylinder Pin	
19	2	TL550-100-043	Hydraulic Cylinder (Ram)	
20	4	TL5X2-301-156	Ram Wheel Axle	
21	4	TL5X2-301-157	Ram Wheel	
22	1	TL5X2-301-170	Right Side Rail	
23	1	TL5X2-301-171	Left Side Rail	
24	1	TL5X2-301-172	Right Door Track	
25	1	TL5X2-301-176	Left Door Track	

Hoop Drive

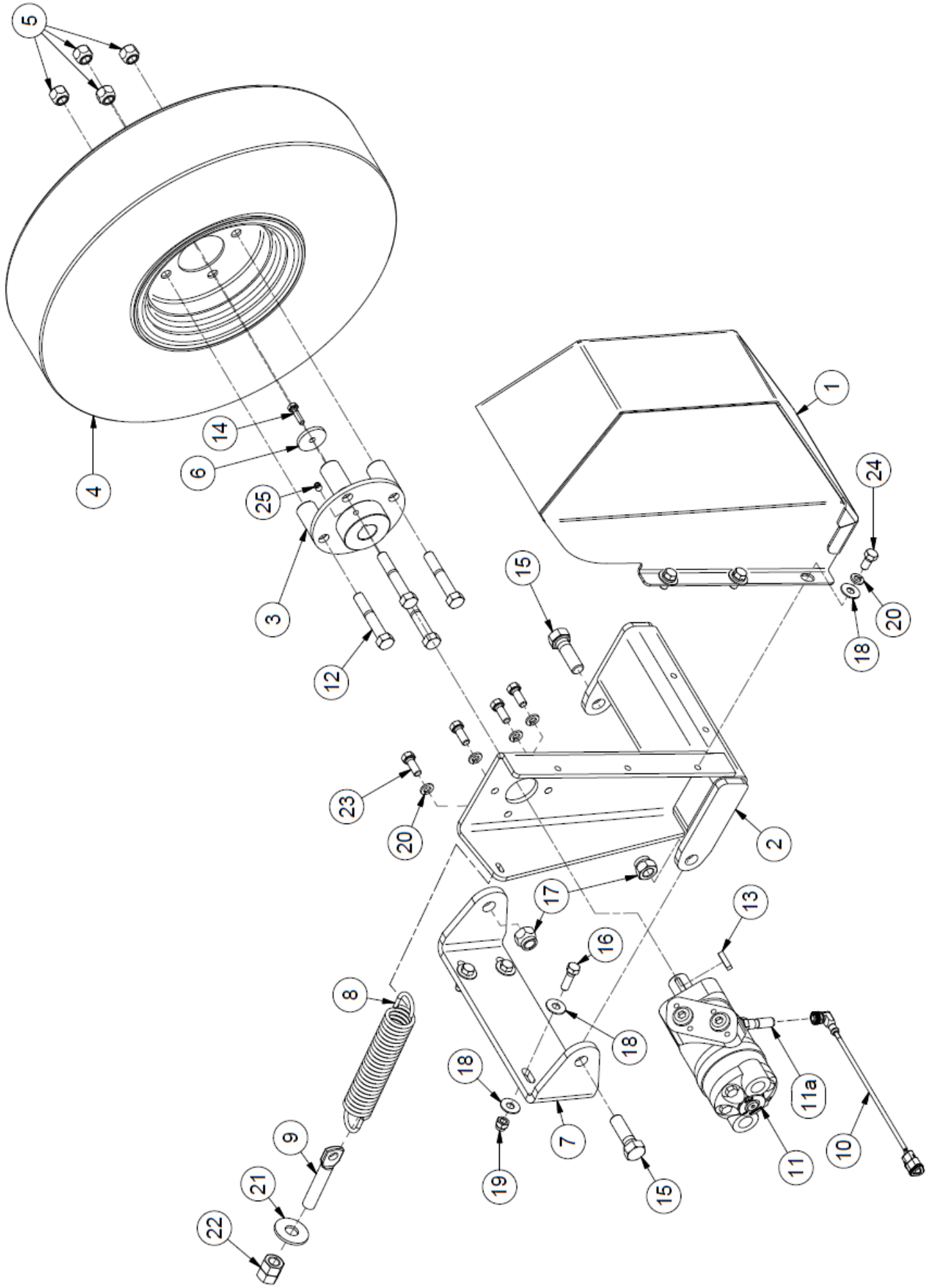

5
4
14
6
25
3
12
1
24
20
18
15
23
20
2
17
13
16
8
18
18
11a
9
7
19
15
11
10
21
22

Hoop Drive

ITEM	QTY	PART NUMBER	DESCRIPTION
1	1	25073	Hoop Wheel Guard Weldment
2	1	31933	Hoop Motor Mount
3	1	TL500-100-051	Wheel Hub- 1” Shaft
4	1	TL500-100-052	Drive Wheel
5	4	TL500-100-054	Wheel Nut, 1/2”
6	1	TL552404	Hoop Motor Plate
7	1	TL5X2-100-090	Drive Base Bracket
8	1	TL500-101-231	Wheel Tensioner Spring
9	1	PP00051	Flat Eye Bolt 5/8 x 7.0
10	1	32607	ECV Hoop Speed Sensor Harness
11	1	VAL MLHPQ200C7URS-NE	Hyd. Motor (Hoop Motor) Rear Ported with Sensor
11a	1	32665	Hoop Speed Sensor for ECV Wrappers
12	4	HB 1/2-20X3.0 Z5	Hex Bolt 1/2-20x3 Grade 5 Zinc Plated Hex Cap Screw NF
13	1	KS40254	Keystock .25 x 1
14	1	HB 1/4-20X1 Z5	Hex Bolt 1/4-20x1 Grade 5 Zinc Plated Hex Cap Screw
15	2	HB 5/8-11X2 Z5	Hex Bolt 5/8-11x2 Grade 5 Zinc Plated Hex Cap Screw
16	4	HB 3/8-16X1.25 Z5	Hex Bolt 3/8-16x1 1/4 Grade 5 Zinc Plated Hex Cap Screw
17	2	LN 5/8 N	LN 5/8-11 Zinc Plated Nylon Insert Lock Nut
18	13	FW 3/8	Flatwasher - 3/8” Zinc Plated USS
19	4	LN 3/8 N	LN 3/8-16 Zinc Plated Nylon Insert Lock Nut
20	9	LW 3/8	LW - 3/8” Zinc Plated Medium Split
21	1	FW 5/8	Flatwasher - 5/8” Zinc Plated USS
22	2	HN 5/8	Hex Nut 5/8”-11 Grade 5 Zinc Plated Finished
23	4	HB 3/8-16X1 Z5	Hex Bolt 3/8-16x1 Grade 5 Zinc Plated Hex Cap Screw
24	5	HB 3/8-16X0.75 Z5	Hex Bolt 3/8-16x3/4 Grade 5 Zinc Plated Hex Cap Screw
25	1	SS 516X38	Allan Head Set Screw, 5/16-18 x 3/8

Hoop Brace - Original

For wrappers with a serial number **up to** 16R192

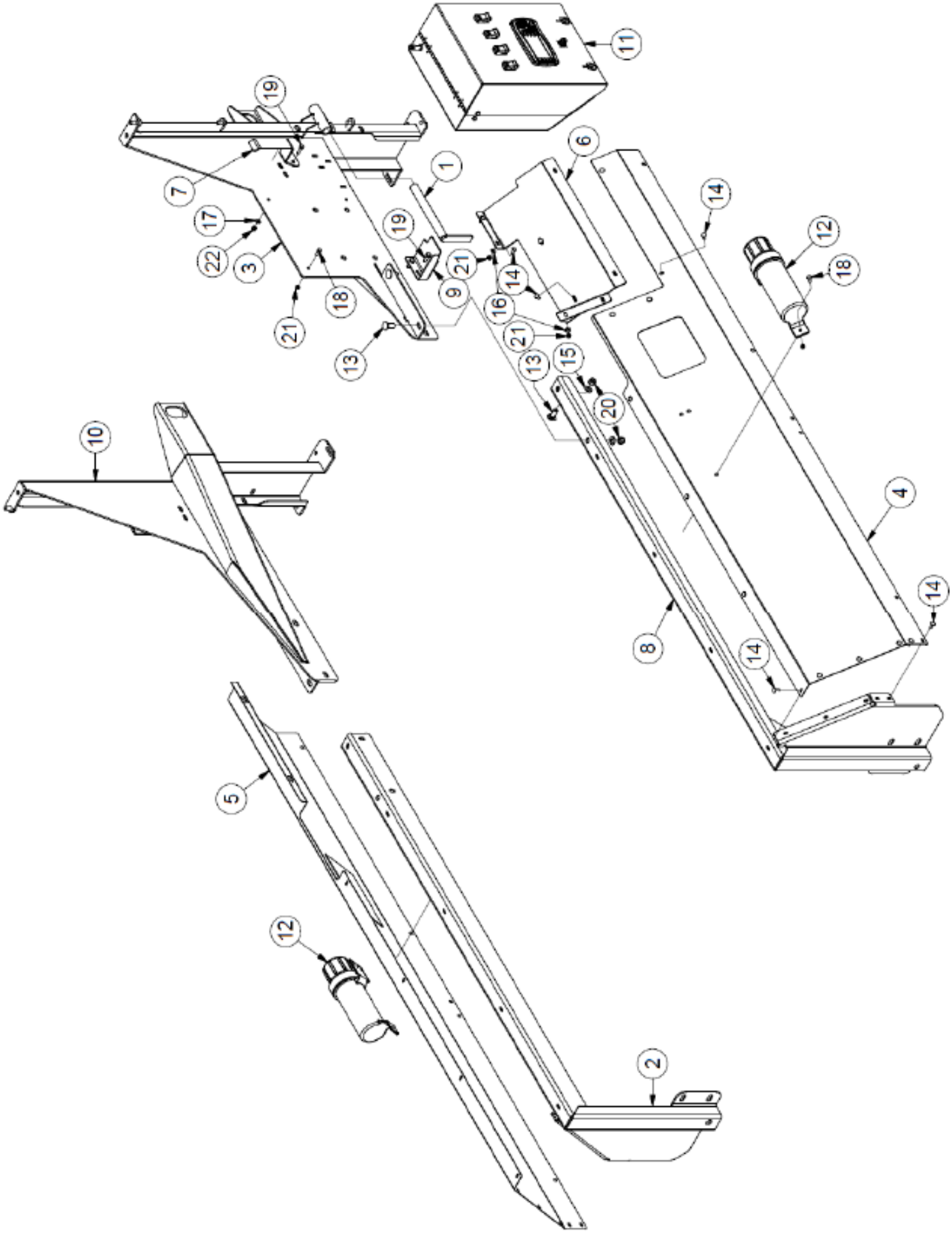

Hoop Brace - Original

For wrappers with a serial number **up to** 16R192

ITEM	QTY	PART NUMBER	DESCRIPTION
1	1	25667	Hoop Lock Pin
2	1	32788	Right Front Hoop Brace
3	1	33361	Control Panel Mount
4	1	35387	Left Side Shield
5	1	35388	Right Side Shield
6	1	35606	Control Panel Shield
7	2	35621	Tape Holder
8	1	35634	Left Rear Hoop Brace
9	1	35638	Hoop Lock
10	1	35640	Right Rear Hoop Brace
11	1	36043	Control Panel
12	2	TL5X2-201-111	Manual Holder
13		CB 1/2-13X1.1/4 Z5	Carriage Bolt Zinc
14		CB 1/4-20X 3/4 Z	Carriage Bolt 1/4-20 x 3/4” Zinc Plated
15		FW 1/2	Flatwasher - 1/2” Zinc Plated USS
16		FW 1/4	Flatwasher - 1/4” Zinc Plated USS
17		FW 5/16	Flatwasher - 5/16” Zinc Plated USS
18		HB 5/16-18X1.0 Z5	Hex Bolt 5/16-18 x 1” Grade 5 Zinc Plated Hex Cap Screw NC
19		HB 1/4-20X 3/4 Z5	Hex Bolt - 1/4”-20 x 3/4” Grade 5 Zinc Plated Hex Cap Screw NC
20		LN 1/4 N	Locknuts - 1/4-20 Zinc Plated Nylon Insert
21		LN 1/2 N	Locknuts - 1/2-13 Zinc Plated Nylon Insert Lock Nut
22		LN 5/16 N	Locknut - 5/16-18 Type NE Zinc Plated Nylon Insert

Hoop Brace - Current

For wrappers with a serial # **from** 16R235 **to** current

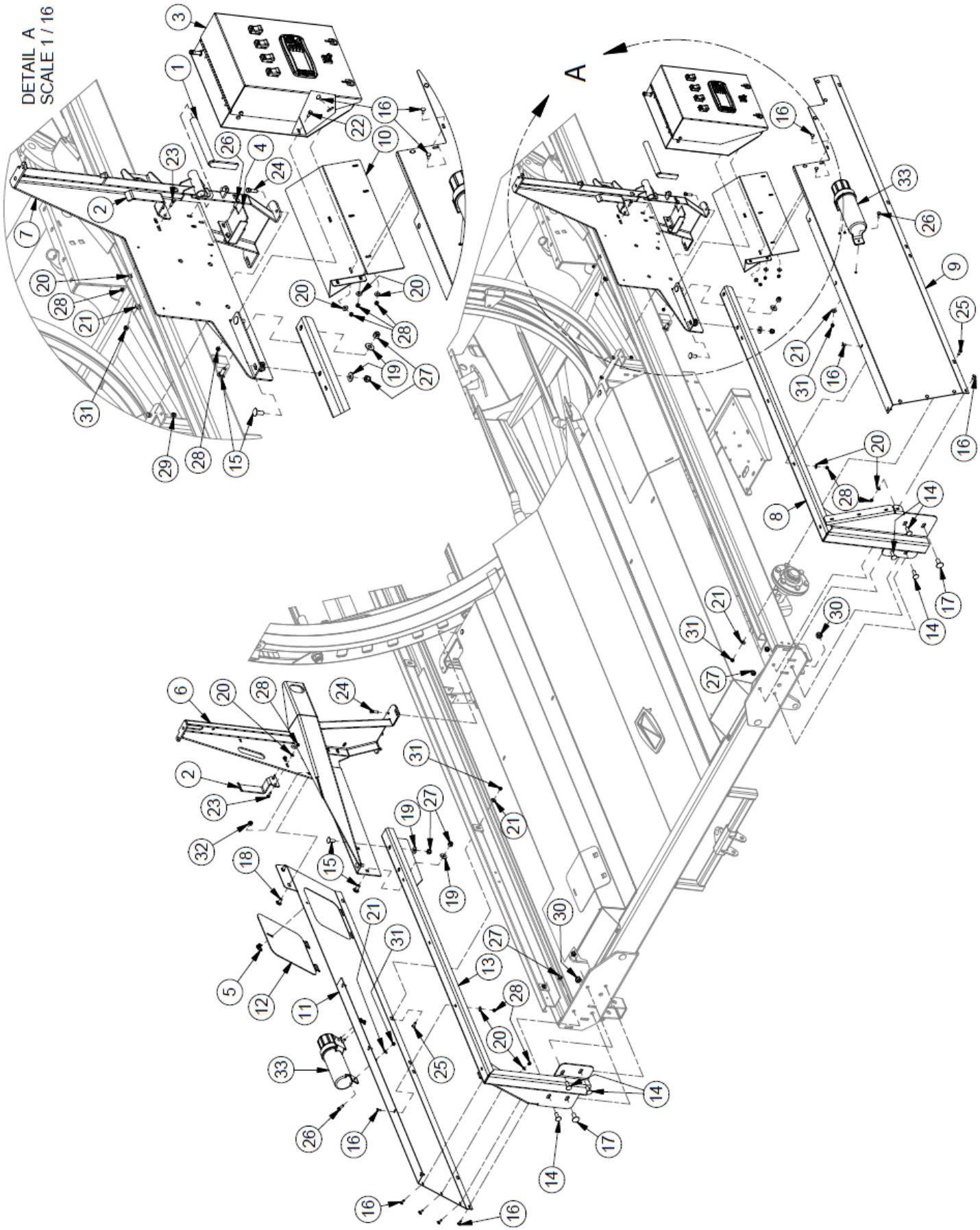

Hoop Brace - Current

For wrappers with a serial # **from** 16R235 **to** current

ITEM	QTY	PART NUMBER	DESCRIPTION
1	1	25667	Hoop Lock Pin
2	2	35621	Single Tape Holder
3	1	35630	ECV Control Panel (2017+)
4	1	35638	Hoop Lock
5	3	36268	Cam Lock
6	1	39545	Right Guide Mount
7	1	40273	Left Bale Guide
8	1	40274	Left Hoop Brace
9	1	40280	ECV Left Shield
10	1	40281	Control Panel Shield
11	1	40290	ECV Right Shield
12	1	40294	ECV Oil Panel Lid
13	1	40541	Right Hoop Brace
14	6	CB 1/2-13 X1.5 Z5	Carriage Bolt - 1/2-13 x 1 1/2” Grade 5 Zinc
15	8	CB 1/2-13 X1.25 Z5	Carriage Bolt - 1/2-13 x 1 1/4” Grade 5 Zinc
16	26	CB 1/4-20 X0.75 Z5	Carriage Bolt - 1/4-20 x 3/4” Grade 5 Zinc
17	8	CB 5/8-11 X1.5 Z5	Carriage Bolt - 5/8-11 x 1 1/2” Grade 5 Zinc
18	2	CB 7/16-14 X1 Z5	Carriage Bolt - 7/16-14 x 1” Grade 5 Zinc
19	20	FW 1/2	Flatwasher - 1/2” Zinc Plated USS
20	34	FW 1/4	Flatwasher - 1/4” Zinc Plated USS
21	12	FW 5/16	Flatwasher - 5/16” Zinc Plated USS
22	4	HB 1/4-20X0.75 Z5	Hex Bolt 1/4-20x3/4 Grade 5 Zinc Plated Hex Cap Screw
23	4	HB 1/4-20X1 Z5	Hex Bolt 1/4-20x1 Grade 5 Zinc Plated Hex Cap Screw
24	6	HB 3/8-16X1.25 Z5	Hex Bolt 3/8-16x1 1/4 Grade 5 Zinc Plated Hex Cap Screw
25	4	HB 5/16-18X1 FHSCS	Hex Bolt - 5/16”-18 x 1” Flat Socket Cap Screw
26	8	HB 5/16-18X1 Z5	Hex Bolt 5/16-18x1 Grade 5 Zinc Plated Hex Cap Screw
27	14	LN 1/2 N	LN 1/2-13 Zinc Plated Nylon Insert Lock Nut
28	34	LN 1/4 N	LN 1/4-20 Zinc Plated Nylon Insert Lock Nut
29	6	LN 3/8 N	LN 3/8-16 Zinc Plated Nylon Insert Lock Nut
30	2	LN 5/8 N	LN 5/8-11 Zinc Plated Nylon Insert Lock Nut
31	12	LN 5/16 N	LN 5/16-18 Zinc Plated Nylon Insert Lock Nut
32	2	LN 7/16 N	LN 7/16-14 Zinc Plated Nylon Insert Lock Nut
33	2	TL5X2-201-111	Operators Manual Holder

Safety Guard - Original

For wrappers with a serial number **up to** 16R192

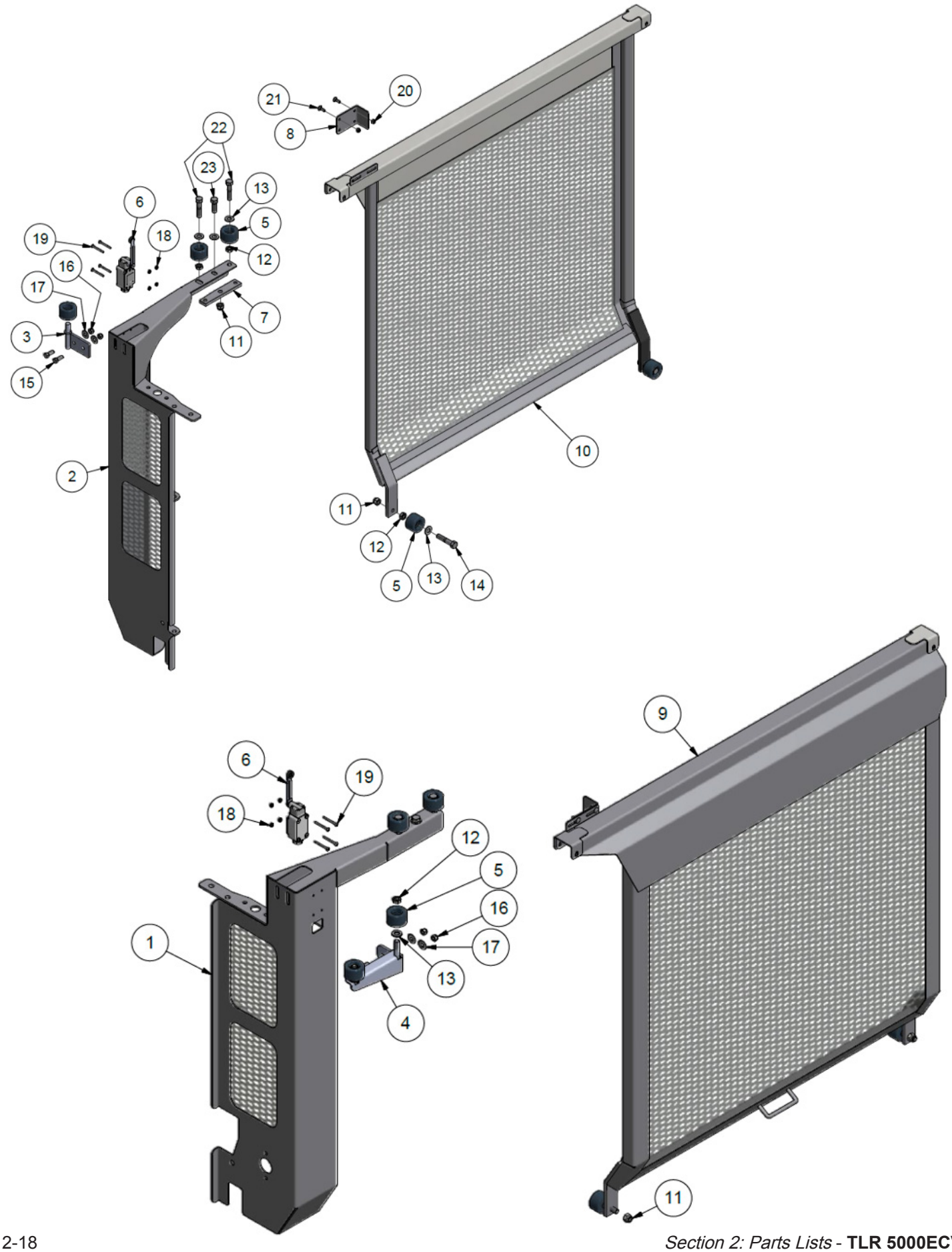

Safety Guard - Original

For wrappers with a serial number **up to** 16R192

ITEM	QTY	PART NUMBER	DESCRIPTION
1	1	TL109-100-364	Left Safety Guard
2	1	TL109-100-363	Right Safety Guard
3	1	TL5X2-301-103	Right Top Door Roller Bracket
4	1	TL5X2-301-120	Left Top Door Roller Bracket
5	10	TL5X2-301-121	Door Roller
6	2	TL550-100-060	Limit Switch
7	2	28741	Rear Roller Mount
8	2	25062	Door Switch Tab
9	1	31562	Left Door
10	1	33222	Right Door
11	6	LN 1/2 N	Locknuts - 1/2-13 Zinc Plated Nylon Insert Lock Nut
12	8	HN 1/2 JAM	Hex Nut - 1/2-13 Zinc Plated Hex Jam Nut
13	10	FWSAE 1/2	Flatwasher, 1/2” Zinc Plated SAE
14	4	HB 1/2-13X2.1/2 Z5	Hex Bolt 1/2-13 x 2 1/2” Grade 5 Zinc Plated Hex Cap Screw
15	4	HB 3/8-16X1.1/4 Z5	Hex Bolt 3/8-16 x 1 1/4” Grade 5 Zinc Plated Hex Cap Screw
16	4	LN 3/8 N	Locknuts - 3/8-16 Zinc Plated Nylon Insert Lock Nut
17	4	FW 3/8	Flatwasher Plated, 3/8” Zinc Plated USS (2984)
18	8	HN 10-24	Nut - 10-24 Low Carbon Zinc Plated Machine Screw Nut
19	8	HB 10-24X1.3/4 Z5	Hex Bolt - #10-24 x 1 3/4 Zinc Finish Flat Socket Cap Screw
20	4	LN 1/4 N	Locknuts - 1/4-20 Zinc Plated Nylon Insert
21	4	CB 1/4-20X 3/4 Z	Carriage Bolt 1/4-20 x 3/4” Zinc Plated
22	4	HB 1/2-13X2.1/4 Z5	Hex Bolt - 1/2”-13 x 2 1/4”
23	2	HB 1/2-13X1.1/2 Z5	Hex Bolt 1/2-13 x 1 1/2” Grade 5 Zinc Plated Hex Cap Screw

Safety Guard - Current

For wrappers with a serial # **from** 16R235 **to** current

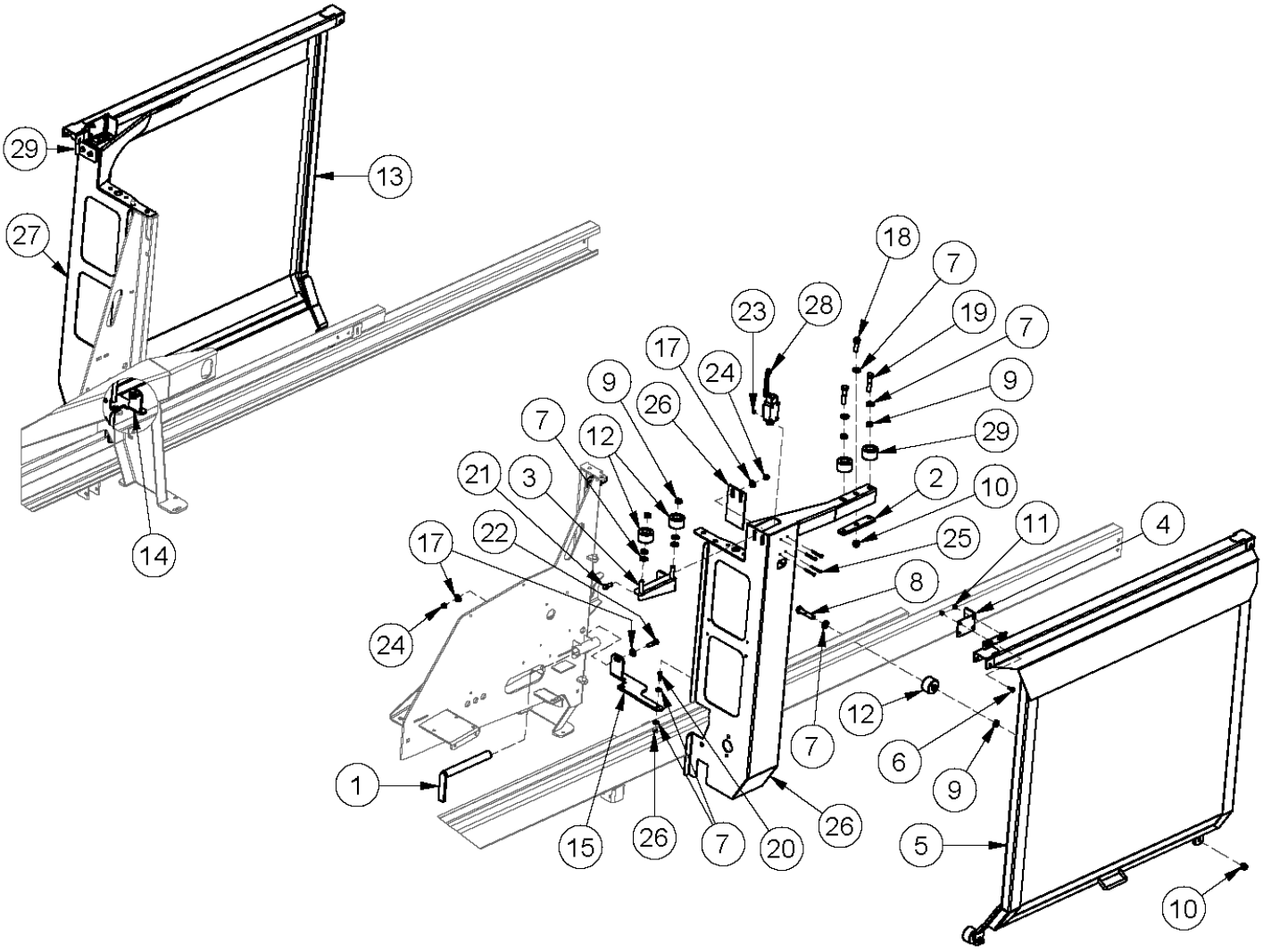

Safety Guard - Current

For wrappers with a serial # **from** 16R235 **to** current

ITEM	QTY	PART NUMBER	DESCRIPTION
1	1	25667	Hoop Lock Pin
2	2	28741	Door Roller Mount
3	1	31565	Door Mount Extension
4	1	25062	Door Switch Tab
5	1	40284	Left Safety Guard
6	2	CB 1/4-20X 3/4 Z	Carriage Bolt 1/4-20 x 3/4” Zinc Plated
7	18	FW 1/2	Flatwasher - 1/2” Zinc Plated USS (1096)
8	2	HB 1/2-13X2.1/2 Z5	Hex Bolt 1/2-13 x 2 1/2” Grade 5 Zinc Plated Hex Cap Screw
9	8	HN 1/2 JAM	Hex Nut - 1/2-13 Zinc Plated Hex Jam Nut
10	4	LN 1/2 N	Locknuts - 1/2-13 Zinc Plated Nylon Insert Lock Nut
11	2	LN 1/4 N	Locknuts - 1/4-20 Zinc Plated Nylon Insert
12	11	TL559906	Door Roller
13	1	40289	Right Safety Guard
14	1	40945	Right Door Support
15	1	40946	Left Door Support
16	4	FW 1/4	Flatwasher - 1/4” Zinc Plated USS (6480)
17	8	FW 3/8	Flatwasher Plated, 3/8” Zinc Plated USS (2984)
18	2	HB 1/2-13X1.1/2 Z5	Hex Bolt 1/2-13 x 1 1/2” Grade 5 Zinc Plated Hex Cap Screw
19	4	HB 1/2-13X2.1/4 Z5	Hex Bolt - 1/2”-13 x 2 1/4”
20	2	HB 1/4-20X1.0 Z5	Hex Bolt 1/4-20 x 1” Grade 5 Zinc Plated Hex Cap Screw
21	14	HB 3/8-16X1.0 Z5	Hex Bolt 3/8-16 x 1” Grade 5 Zinc Plated Hex Cap Screw
22	2	HB 3/8-16X1.1/2 Z5	Hex Bolt - 3/8-16 x 1 1/2” Grade 5 Zinc Plated Hex Cap Screw
23	8	HN 10-24	Nut - 10-24 Low Carbon Zinc Plated Machine Screw Nut
24	6	LN 3/8 N	Locknuts - 3/8-16 Zinc Plated Nylon Insert Lock Nut
25	8	MS 10X1 3/4	Machine Screw 10-24x1-3/4
26	1	TL109-100-363	Left Door Mount
27	1	TL109-100-364	Right Door Mount
28	2	TL550-100-060	Limit Switch
29	1	TL5X2-301-103	Right Top Door Roller Bracket

Cylinder Supports

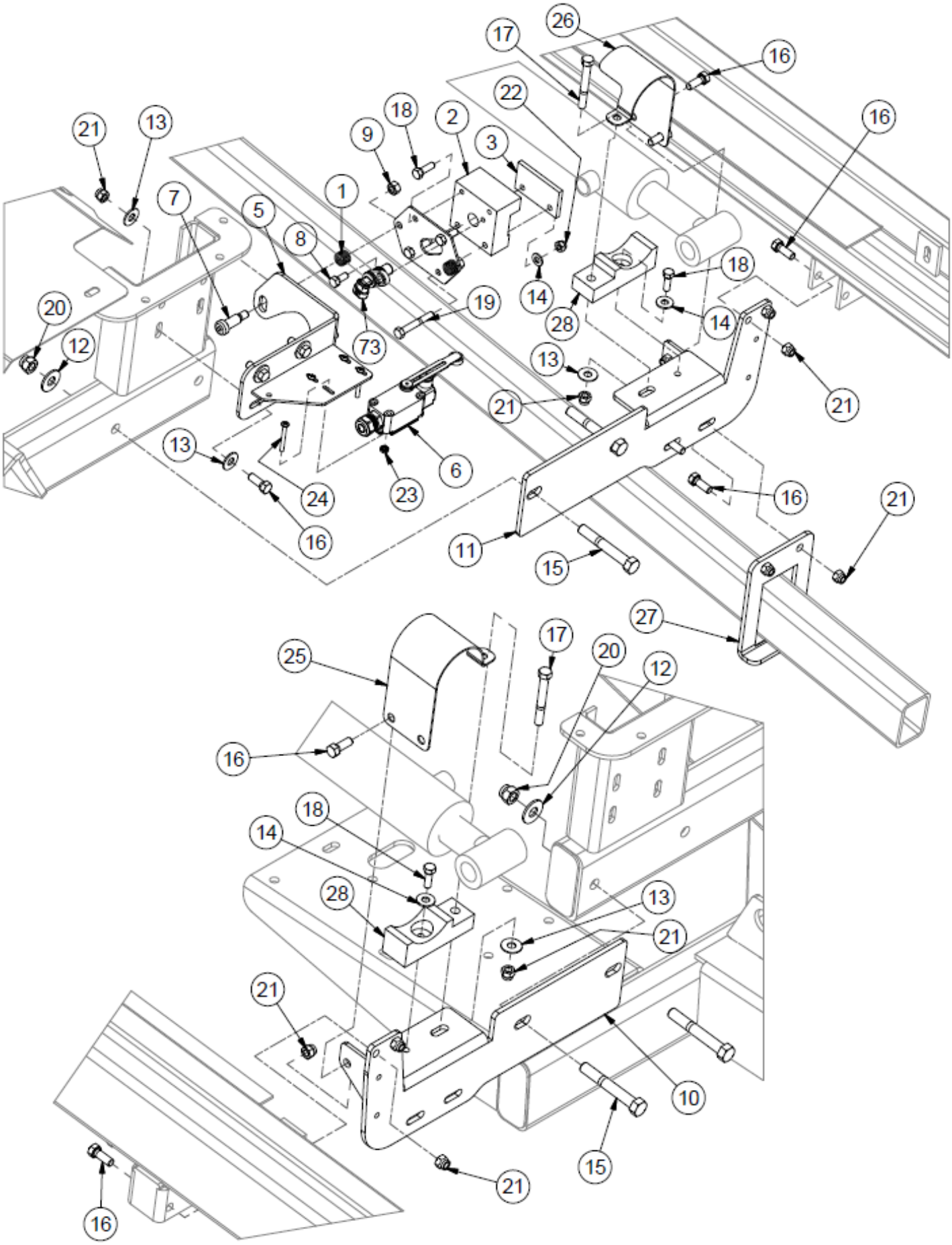

Cylinder Supports

ITEM	QTY	PART NUMBER	DESCRIPTION	SERIAL BREAK
1	2	27566	Spring Compression for Wrappers .97 OD X 2.0 Long	
2	1	31712	UHMW Sensor Guide Strip	
3	1	31713	UHMW Sensor Guide Strip	
4	1	31714	ECV Wrapper, Mounting Plate for Ram Position Sensor	
5	1	31977	ECV Wrapper, Ram Position Sensor Bracket	
6	1	ECV Ram Switch	ECV Wrapper, Left and Right Door Switch, Ram Home Switch	
7	2	HB 1/2X1 SS	Socket Head Shoulder Screws - 1/2 Shldr x 1 x 3/8-16	
8	1	HB 5/16-18X0.75 Z5	Hex Bolt 5/16-18x3/4 Grade 5 Zinc Plated Hex Cap Screw	
9	2	HN 3/8	Hex Nut 3/8”-16 Grade 5 Zinc Plated Finished	
10	1	40278	Left Cyl Support	16R235 to Current
	1	25671	Left Cylinder Support	Up to 16R192
11	1	40278M	Right Cyl Mount	16R235 to Current
	1	25672	Right Cylinder Support	Up to 16R192
12	4	FW 1/2	Flatwasher - 1/2” Zinc Plated USS	
13	10	FW 3/8	Flatwasher - 3/8” Zinc Plated USS	
14	4	FW 5/16	Flatwasher - 5/16” Zinc Plated USS	
15	4	HB 1/2-13X3.5 Z5	Hex Bolt 1/2-13x3 1/2 Grade 5 Zinc Plated Hex Cap Screw	
16	14	HB 3/8-16X1 Z5	Hex Bolt 3/8-16x1 Grade 5 Zinc Plated Hex Cap Screw	
17	2	HB 3/8-16X3 Z5	Hex Bolt 3/8-16x3 Grade 5 Zinc Plated Hex Cap Screw	
18	4	HB 5/16-18X1 Z5	Hex Bolt 5/16-18x1 Grade 5 Zinc Plated Hex Cap Screw	
19	2	HB 5/16-18X2.25 Z5	Hex Bolt 5/16-18x2 1/4 Grade 5 Zinc Plated Hex Cap Screw	
20	4	LN 1/2 N	LN 1/2-13 Zinc Plated Nylon Insert Lock Nut	
21	16	LN 3/8 N	LN 3/8-16 Zinc Plated Nylon Insert Lock Nut	
22	6	LN 5/16 N	LN 5/16-18 Zinc Plated Nylon Insert Lock Nut	
23	4	LN 10-24	K-Lok Locknut	
24	4	MS #10X24X1.75	Machine Screw - (Inch)	
25	1	TL5X2-100-132	RH Cylinder Mount	
26	1	TL5X2-100-133	LH Cylinder Clamp	
27	1	TL5X2-500-142	Bottom Push Off Holder	
28	2	TLT59-CYL-01	Cylinder Mount	

Axle-Spindle-Hub

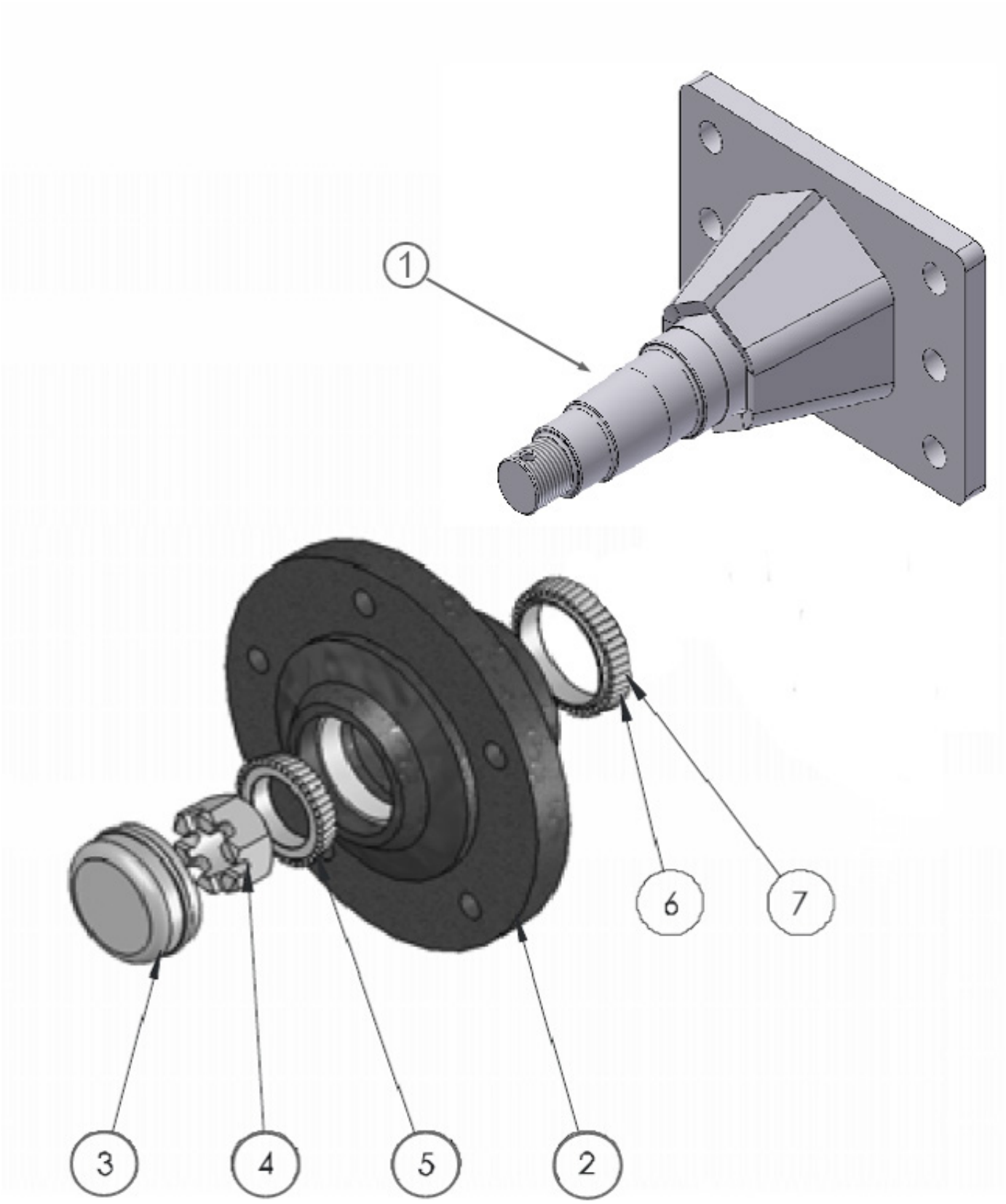

Axle-Spindle-Hub

ITEM	QTY	PART NUMBER	DESCRIPTION	SERIAL BREAK
1	1	TL550-200-001	Spindle	Up to 11R012
1	1	TL109-100-356	Spindle	11R012 to Current
2	1	TL500-100-066	Hub	
3	1	TL500-100-073	Dust Cap	
4	1	TL500-100-070	Castellated Nut	
5	1	TL500-100-068	Outer Bearing	
6	1	TL500-100-064	Inner Bearing	
7	1	TL500-100-063	Inner Seal	

Front Axle

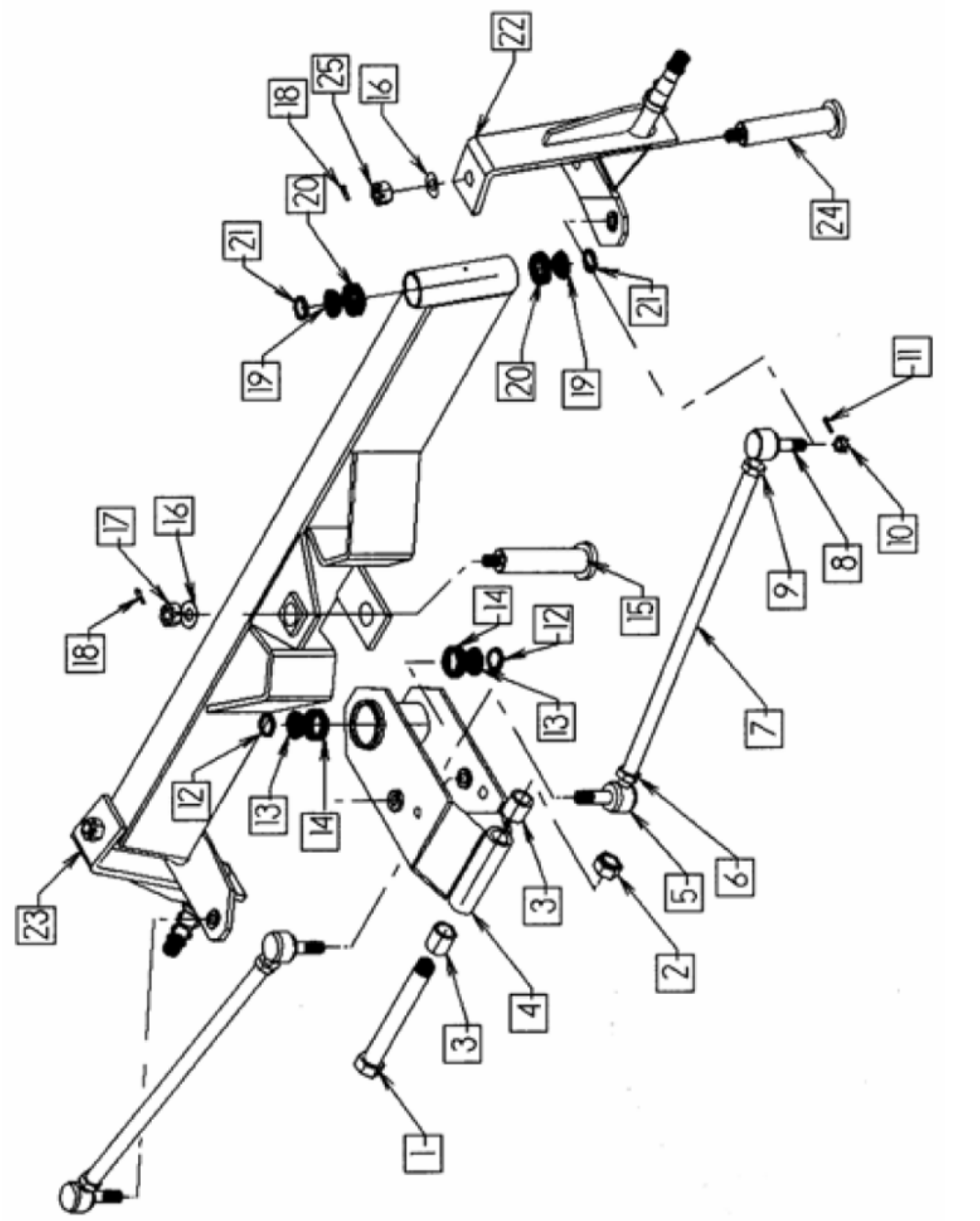

22
25
18
16
20
21
24
19
20
19
21
11
17
16
18
15
14
12
13
9
8
10
7
12
13
14
23
3
5
6
2
4
3
1

Front Axle

ITEM	QTY	PART NUMBER	DESCRIPTION
1	1	TL500-100-152	7/8 x 8 Bolt
2	1	TL500-100-153	7/8 Locknut
3	2	TL550-111-012	Tongue Bracket Bushing
4	1	TL550-221-008	Tongue Bracket Asm
5	2	TL550-111-006	Tie Rod End Right Thread
6	2	TL550-111-003	¾ Jam Nut (NF RH)
7	2	TL550-220-001	Tie Rod
8	2	TL550-111-007	Tie Rod End Left Thread
9	2	TL550-111-002	¾ Jam nut (NF LH)
10	4	TL550-111-004	9/16 NF Slotted Hex Nut
11	4	TL550-111-005	1/8 Cotter Pin
12	2	TL550-111-011	Tongue Bracket Seal
13	2	TL550-111-010	Tongue Bracket Timkin Bearing
14	2	TL550-111-009	Tongue Bracket Timkin Cup
15	1	TL550-221-013	Tongue Bracket Pin
16	3	TL550-111-014	13/16 Flatwasher
17	1	TL550-111-015	Tongue Bracket Nut
18	3	TL550-111-016	3/16 x 2 Cotter Pin
19	4	TL550-200-080	Spindle Bearing Timkin Cone
20	4	TL550-200-081	Spindle Bearing Timkin Cup
21	4	TL550-200-082	Spindle Bearing Seal
22	1	TL550-100-083	Left Side Spindle Assy
23	1	TL550-100-084	Right Side Spindle Assy
24	2	TL550-100-085	Spindle Pin
25	2	TL500-100-070	1” Fine Thread Castle Nut

Front Corner - Steering

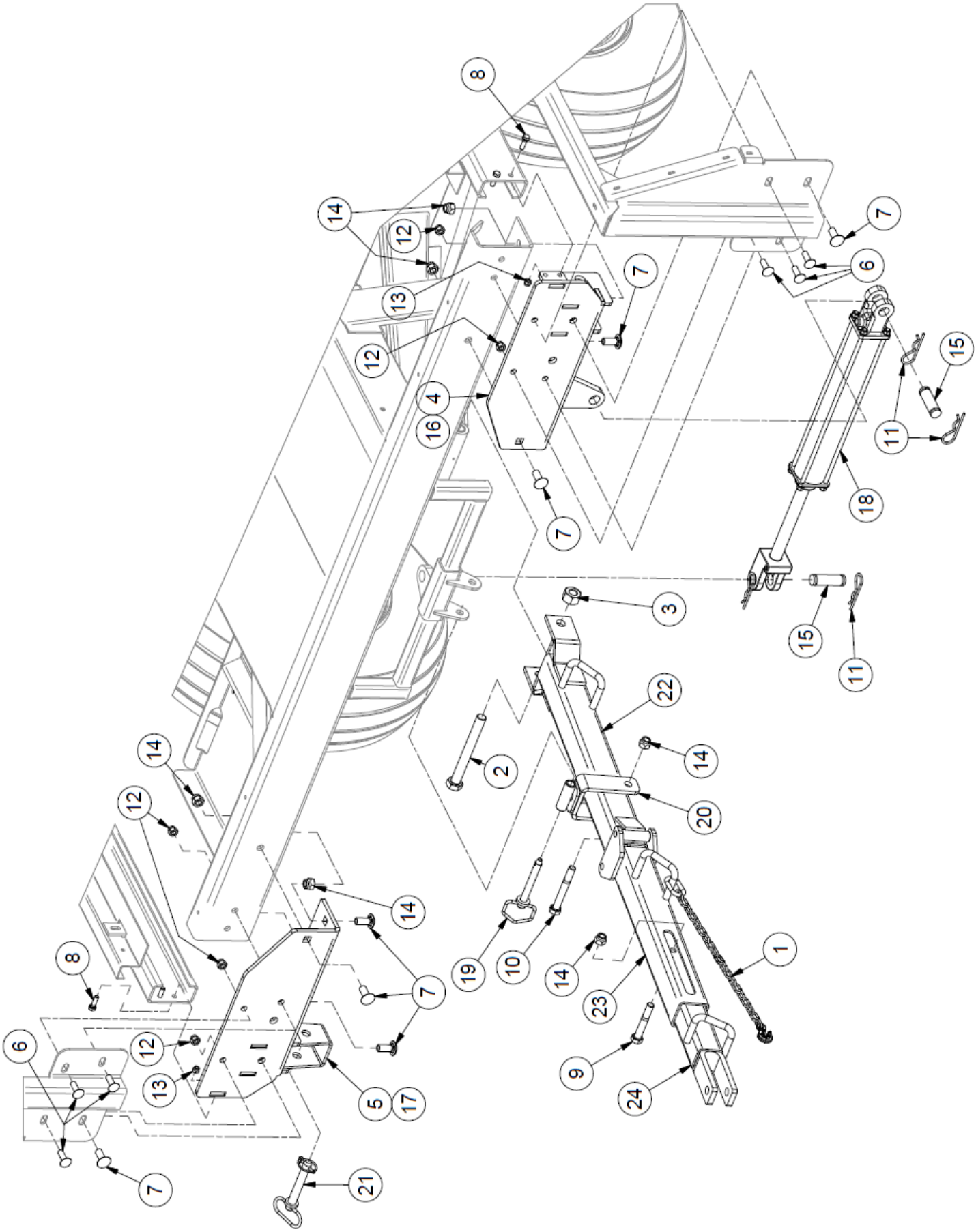

Front Corner - Steering

ITEM	QTY	PART NUMBER	DESCRIPTION	SERIAL BREAK
1	1	25261	Safety Chain 10000 # 59”	
2	1	HB 7/8-9X8.0 Z5	Hex Bolt Plated Gr. 5 N.C	
3	1	LN 7/8 N	Locknuts 7/8-9 Zinc Plated Nylon Insert Lock Nut	
4	1	40270	Front Left Corner	16R236 to Current
5	1	40286	Front Right Corner	16R236 to Current
6	6	CB 1/2-13 X1.5 Z5	Carriage Bolt - 1/2-13 x 1 1/2” Grade 5 Zinc	
7	8	CB 5/8-11 X1.5 Z5	Carriage Bolt - 5/8-11 x 1 1/2” Grade 5 Zinc	
8	4	HB 3/8-16X1.25 Z5	Hex Bolt 3/8-16x1 1/4 Grade 5 Zinc Plated Hex Cap Screw	
9	1	HB 5/8-11X4 Z5	Hex Bolt 5/8-11x4 Grade 5 Zinc Plated Hex Cap Screw	
10	1	HB 5/8-11X5 Z5	Hex Bolt 5/8-11x5 Grade 5 Zinc Plated Hex Cap Screw	
11	4	HP 5/32 X 3.0	Pin Hair - #9 9Ga 3-1/16” OAL Zinc Plated	
12	6	LN 1/2 N	LN 1/2-13 Zinc Plated Nylon Insert Lock Nut	
13	4	LN 3/8 N	LN 3/8-16 Zinc Plated Nylon Insert Lock Nut	
14	10	LN 5/8 N	LN 5/8-11 Zinc Plated Nylon Insert Lock Nut	
15	2	TL5X2-500-116	Cylinder Pin	
16	1	TL5X2-500-131	Front Right Corner	13R001 to 16R234
17	1	TL5X2-500-132	Front Left Corner	13R001 to 16R234
18	1	TL500-100-103	Hydraulic Cylinder, 2 x 16	
19	1	TL500-100-154	Tongue Pin	
20	1	TL500-100-160	Tongue Holder	
21	1	TL550-100-050	Pushoff Pin	
22	1	TL550-100-051	Main Tongue	
23	1	TL550-100-052	Swinging Tongue	
24	1	TL550-100-053	Sliding Tongue	

Rear Corners

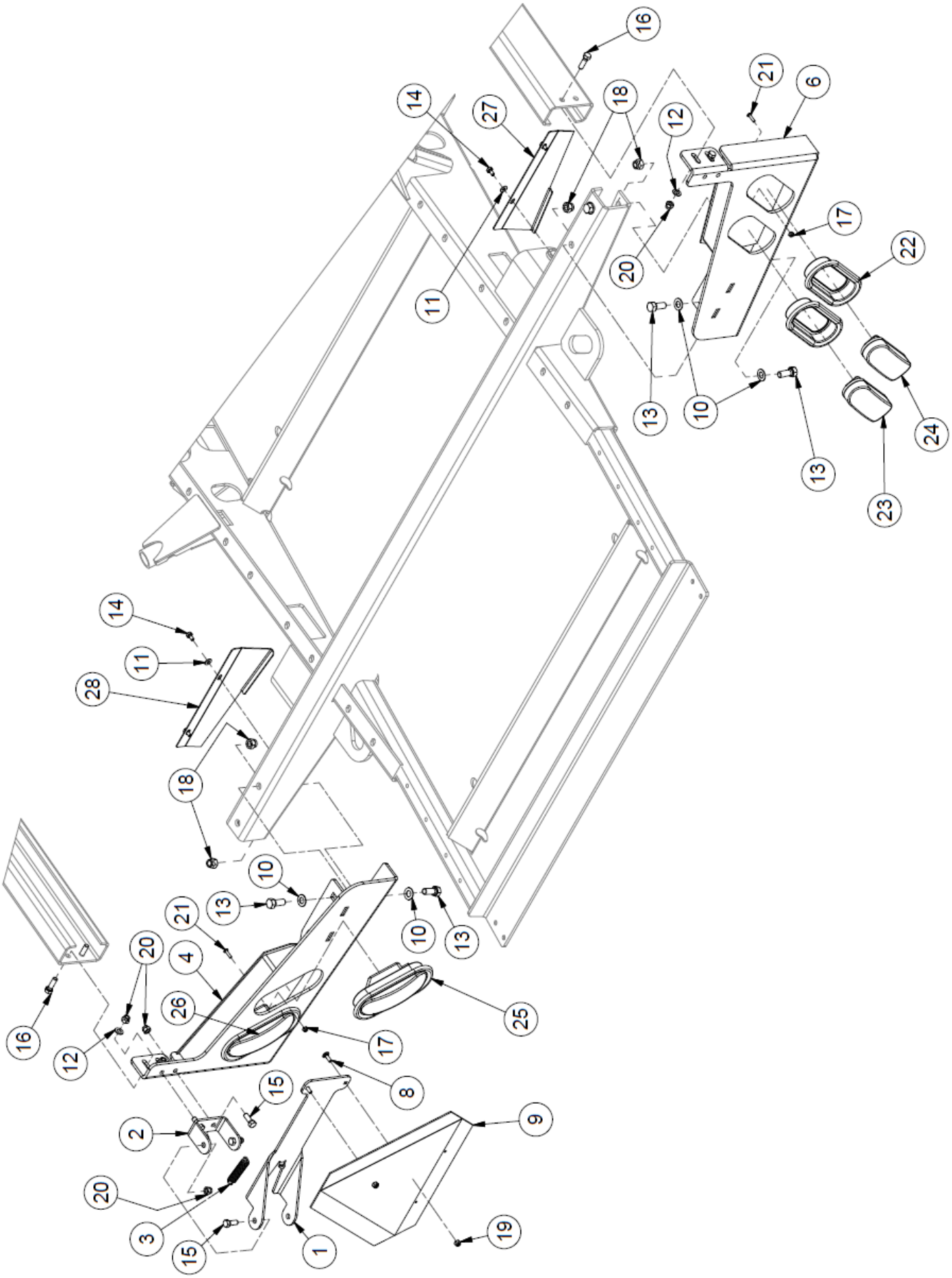

Rear Corners

ITEM	QTY	PART NUMBER	DESCRIPTION	SERIAL BREAK / NOTE
1	1	25075	SMV Attachment	
2	1	25534	SMV Mounting Bracket	
3	1	28771	SMV Spring	
4	1	39524	Rear Corner Left Light Bracket Weldment	16R236 to Current
5	1	TL5X2-500-135	Left Rear Light Bracket	13R001 to 16R234
6	1	39848	Rear Right Light Mount	16R236 to Current
7	1	TL5X2-500-134	Right Rear Light Bracket	13R001 to 16R234
8	2	CB 1/4-20 X0.75 Z5	Carriage Bolt - 1/4-20 x 3/4” Grade 5 Zinc	
9	1	DESMV	Slow Moving Vehicle Sign (High Quality Reflective Strips)	
10	8	FW 1/2	Flatwasher - 1/2” Zinc Plated USS	
11	4	FW 1/4	Flatwasher - 1/4” Zinc Plated USS	
12	4	FW 3/8	Flatwasher - 3/8” Zinc Plated USS	
13	8	HB 1/2-13X1.25 Z5	Hex Bolt 1/2-13x1 1/4 Grade 5 Zinc Plated Hex Cap Screw	
14	4	HB 1/4-20X0.5 Z5	Hex Bolt 1/4-20x1/2 Grade 5 Zinc Plated Hex Cap Screw	
15	4	HB 3/8-16X1 Z5	Hex Bolt 3/8-16x1 Grade 5 Zinc Plated Hex Cap Screw	
16	4	HB 3/8-16X1.25 Z5	Hex Bolt 3/8-16x1 1/4 Grade 5 Zinc Plated Hex Cap Screw	
17	2	LN #10 N	LN 3/16-24 Zinc Plated Nylon Insert Lock Nut	
18	8	LN 1/2 N	LN 1/2-13 Zinc Plated Nylon Insert Lock Nut	
19	2	LN 1/4 N	LN 1/4-20 Zinc Plated Nylon Insert Lock Nut	
20	8	LN 3/8 N	LN 3/8-16 Zinc Plated Nylon Insert Lock Nut	
21	2	MS #10X24X0.75	Machine Screw - (Inch)	
22	4	TL5X2-500-136	Light Grommet	
23	2	TL5X2-500-137	Red Brake Light	
24	2	TL5X2-500-138	Amber Brake Light	
25	2	TL5X2-500-140	Red Light Kit	Items 22 & 23
26	2	TL5X2-500-141	Amber Light Kit	Items 22 & 24
27	1	TL5X2-500-170	Right Rear Cross Member Cap	
28	1	TL5X2-500-171	Left Rear Cross Member Cap	

Rear Axle & Roller Bed

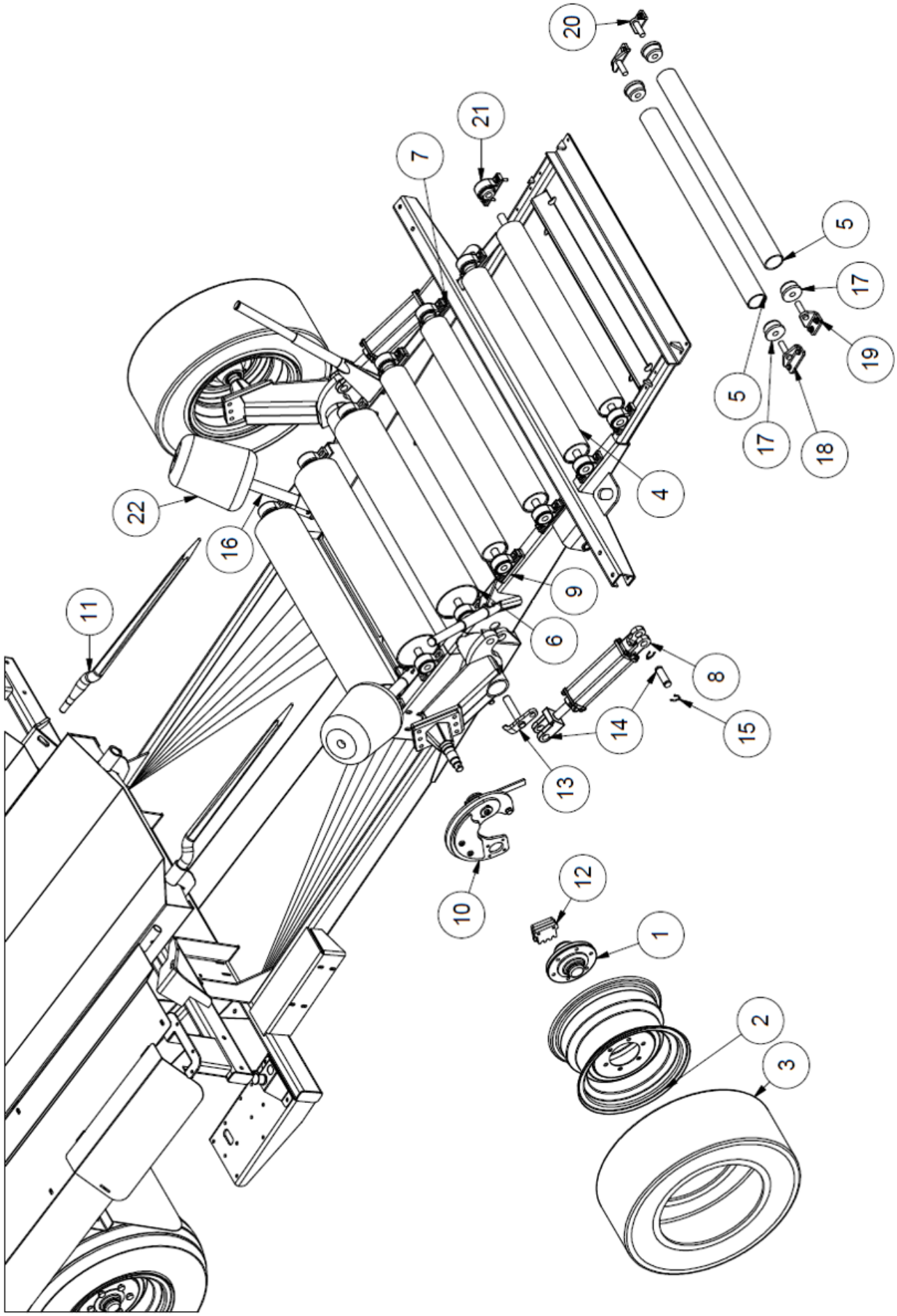

Rear Axle & Roller Bed

ITEM	QTY	PART NUMBER	DESCRIPTION
1	2	TL5X2-500-113	Hub c/w Parts (4000 lb)
2	2	TL550-200-134	Rim with Gear
3	2	TL5X2-500-114	Lug Tire
4	4	TL500-100-099	4” Roller
5	2	TL550-200-106	2 7/8” Roller
6	3	TL500-100-086	6 5/8” Roller
7	3	TL5X2-500-124	1/4” Roller Spacer
8	2	36642	Hydraulic Cylinder for TLR5000 Lift Tail
9	2	TL5X2-500-125	1/2” Roller Spacer
10	1	TL109-100-360	Power Drive Assembly
11	2	TL5X2-500-123	35” Crank Tine
12	1	TL109-100-345	Parking Brake Pad
13	1	27528	Transport Lock Pin
14	2	TL5X2-500-116	Cylinder Pin
15	4	25299	Cylinder Clip
16	2	TL550-301-239	Guide Roller Spindle
17	4	TL550-100-092	3/4” Nylon Bearing End Cap
18	2	TL550-200-003	Small Roller Mount
19	1	TL550-200-005	Left Rear Small Roller Mount
20	1	TL550-200-004	Right Rear Small Roller Mount
21	14	TL550-100-030	1” Pillow Block Bearing
22	2	TL550-301-238	Plastic Guide Roller

TL109-100-360 - Brake Assembly

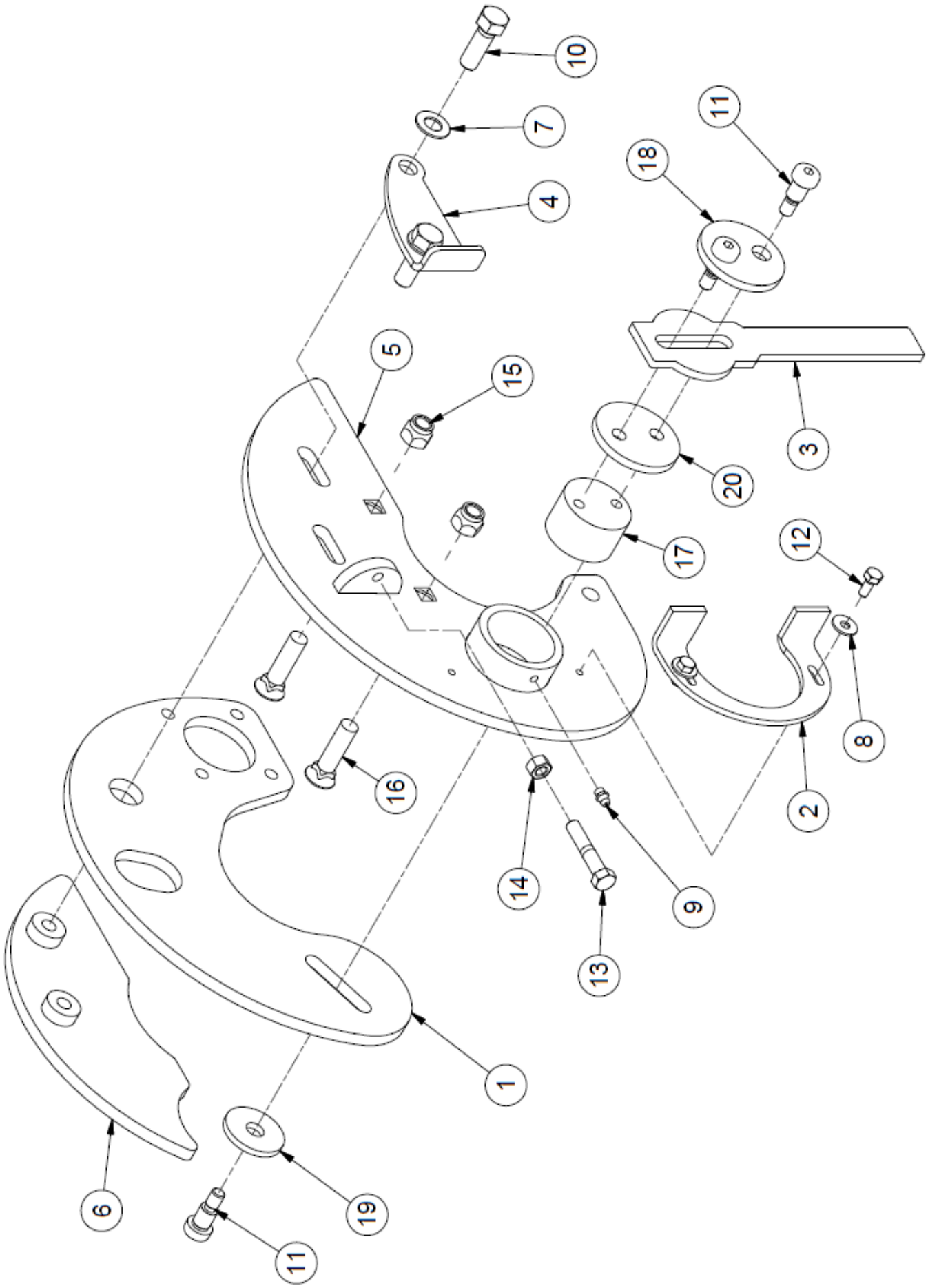

TL109-100-360 - Brake Assembly

ITEM	QTY	PART NUMBER	DESCRIPTION
1	1	25116	Drive Engaging Plate
2	1	25121	Handle Lock
3	1	25122	Handle
4	1	25687	Outside Plate Guide
5	1	25688	Power Drive Plate Weldment
6	1	25703	Bolt On Plate
7	2	FW 1/2	Flatwasher - 1/2” Zinc Plated USS
8	2	FW 1/4	Flatwasher - 1/4” Zinc Plated USS
9	1	GR.25X28	GREASE NIPPLE
10	2	HB 1/2-20X1.5 Z5	Hex Bolt 1/2-20x1 1/2 Grade 5 Zinc Plated Hex Cap Screw
11	3	HB 1/2X5/8 SS	Socket Head Shoulder Screws - 1/2 Shldr x 5/8 x 3/8-16
12	2	HB 1/4-20X0.625 Z5	Hex Bolt 1/4-20x5/8 Grade 5 Zinc Plated Hex Cap Screw
13	1	HB 3/8-16X2 Z5	Hex Bolt 3/8-16x2 Grade 5 Zinc Plated Hex Cap Screw
14	1	HN 3/8	Hex Nut 3/8”-16 Grade 5 Zinc Plated Finished
15	2	LN 1/2 N	LN 1/2-13 Zinc Plated Nylon Insert Lock Nut
16	2	PB 1/2-13X2	Plow Bolts - 1/2-13 x 2 Flat Head Gr.5
17	1	TLWHEEL9	Power Drive Eccentric
18	1	TLWHEEL2012	Outside Handle Washer
19	1	TLWHEEL2013	Inside Cam Washer
20	1	TLWHEEL20121	Inside Handle Washer

Gas Tank - Fenders - Original

For wrappers with a serial # **up to** 15R095

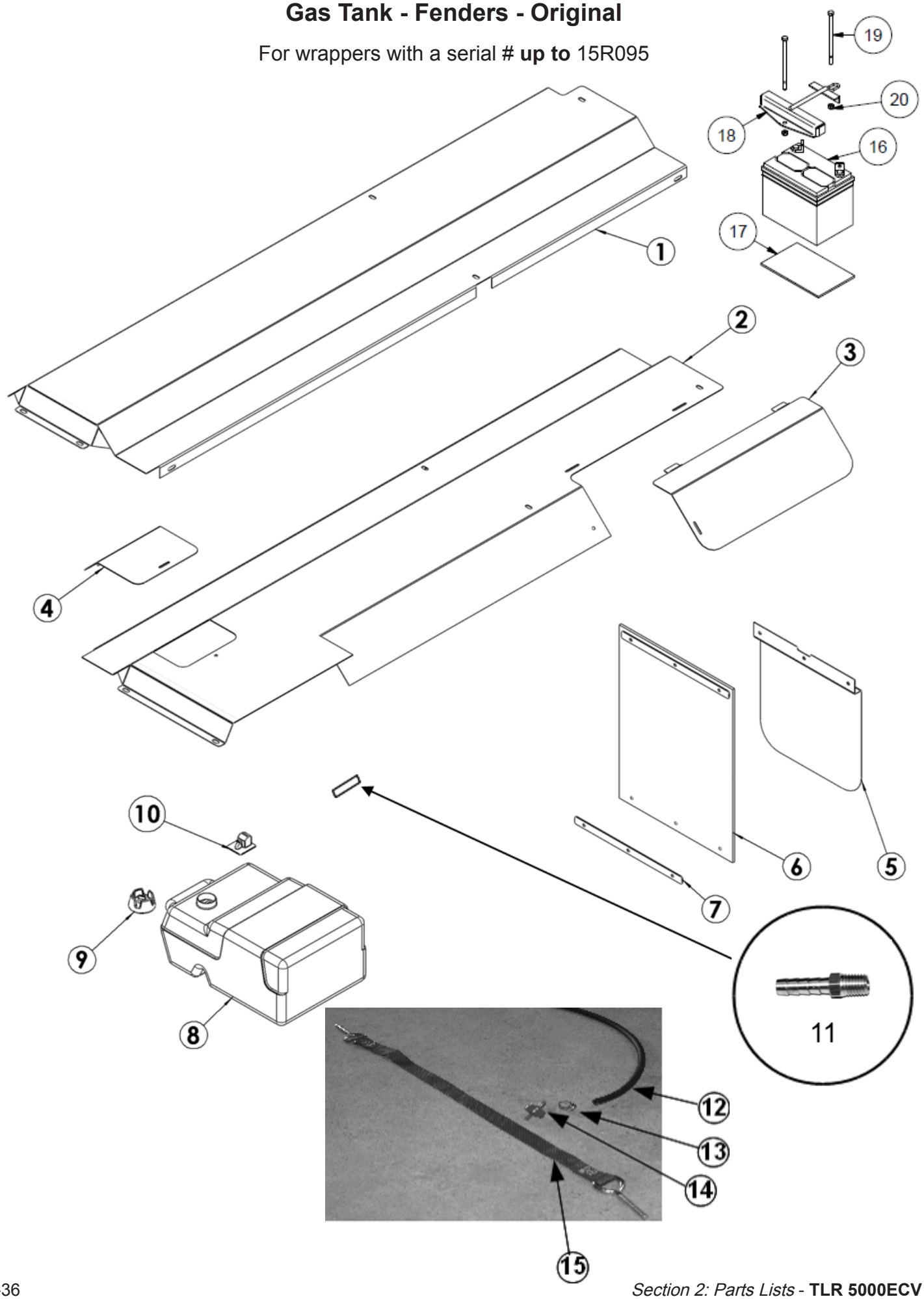

Gas Tank - Fenders - Original

For wrappers with a serial # **up to** 15R095

ITEM	QTY	PART #	DESCRIPTION
1	1	TL5X2-500-145	Right Fender
2	1	TL5X2-500-146	Left Fender
3	1	TL5X2-500-147	Engine Cover
4	1	TL5X2-500-148	Fuel Cap Cover
5	1	TL5X2-500-149	Heat Shield
6	2	TL550-100-054	Mud Flap
7	6	TL500-100-164	Mud Flap Strap
8A		TL5X2-500-150	Fuel Tank c/w Outlet (Ref # 8-13)
8	1	TL550-204-100	Fuel Tank
9	1	TL550-204-101	Vented Fuel Tank Cap
10	1	TL550-204-103	Fuel Gauge
11	1	TL5X2-201-108	Hose Adaptor
12	1	TL5X2-201-107	Fuel Line
13	4	TL550-204-109	Hose Clamp
14	1	TL550-200-111	Fuel Filter
15	1	TL550-204-110	Fuel Tank Tie Down Strap
16	1	TLBATSP35	12V Battery
17	1	TL5X2-007-101	Rubber Battery Pad
18	1	TL500-301-221	Battery Hold-Down
19	2	HB 5/16-18X6.0 Z5	Hex Bolt - 5/16-18 x 6 Grade 5 Zinc Hex Cap Screw
20	2	LN 5/16 N	Locknut - 5/16-18 Type NE Zinc Plated Nylon Insert
	6	HB 5/16-18X1.0 Z5	Hex Bolt 5/16-18 x 1” Grade 5 Zinc Plated Hex Cap Screw N.C.
	6	FW 5/16	Flatwasher - 5/16” Zinc Plated USS (3840)
	6	HN 5/16	Hex Nut 5/16”-18 Grade 5 Zinc Plated Finished Hex Nut N.C.
		3/16 x 1” Chain	Mud Flap Chain (Left Side: 11 Links) (Right Side: 34 Links)

Gas Tank - Fenders

For wrappers with a serial # **from** 15R100 **to** current

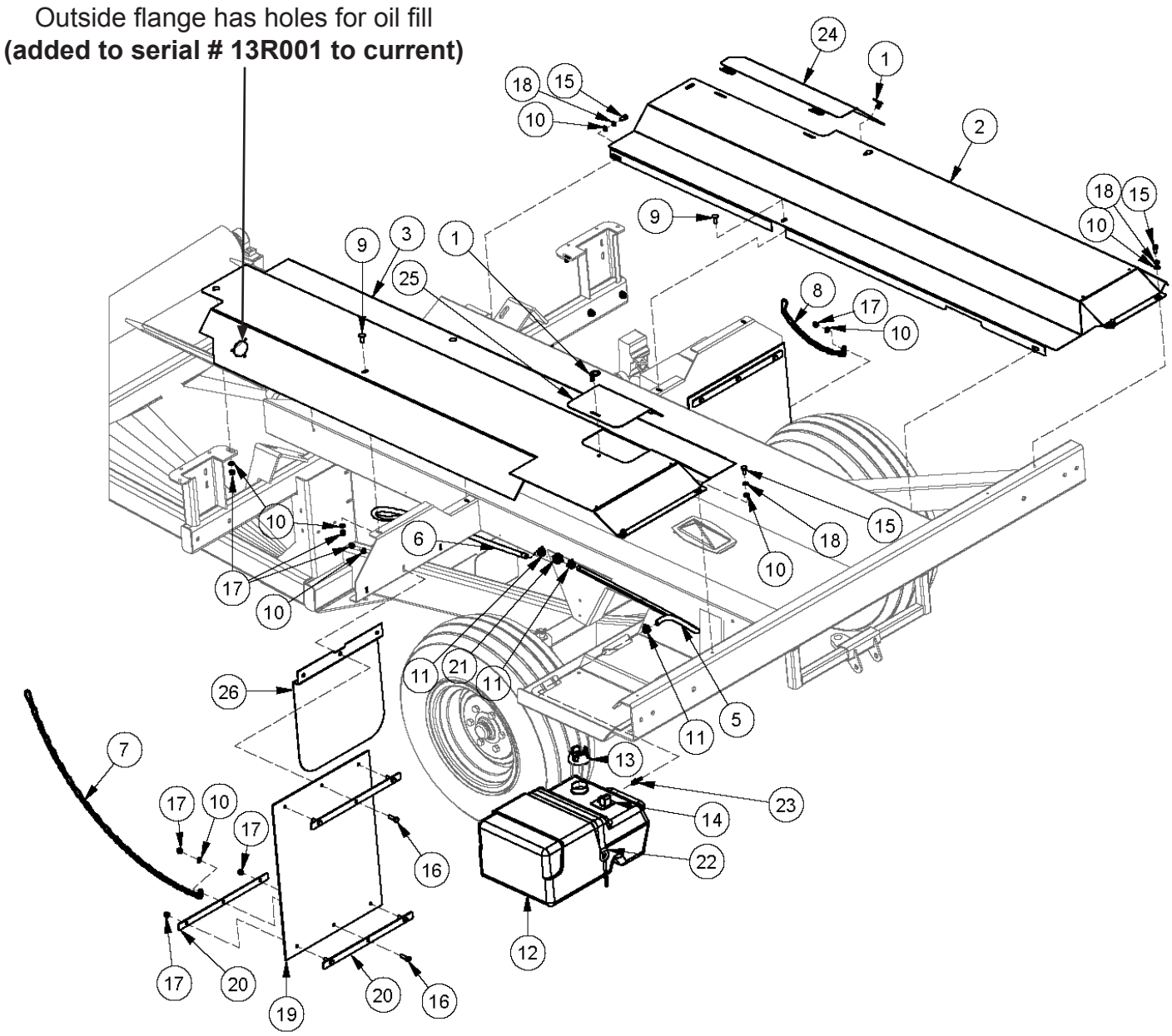

Gas Tank - Fenders

For wrappers with a serial # **from** 15R100 **to** current

ITEM	QTY	PART NUMBER	DESCRIPTION
1	2	36268	Cam Lock
2	1	36628	Left Side Fender
3	1	36646	Right Side Fender
4	1	38442	Right Mud Flap Chain
5	1	40956	Short Fuel Line
6	1	40957	Long Fuel Line
7	1	40958	Right Mud Flap Chain
8	1	40959	Right Mud Flap Chain
9	6	CB 3/8-16X1.0 Z5	Carriage Bolt - 3/8-16 x 1” Grade 5 Zinc
10	26	FW 3/8	Flatwasher Plated, 3/8” Zinc Plated USS
11	3	GC 4	Gear Clamp #4 .25 to .625”
12	1	TL550-204-100	Fuel Tank
13	1	TL550-204-101	Vented Cap for Fuel Tank
14	1	TL550-204-103	Fuel Gauge - Bale Wrapper
15	12	HB 3/8-16X 3/4 Z5	Hex Bolt - 3/8-16 x 3/4” Grade 5 Zinc Plated Hex Cap Screw N.C.
16	16	HB 3/8-16X1.1/4 Z5	Hex Bolt 3/8-16 x 1 1/4” Grade 5 Zinc Plated Hex Cap Screw N.C.
17	38	LN 3/8 N	Locknuts - 3/8-16 Zinc Plated Nylon Insert Lock Nut
18	8	LW 3/8	Lockwasher - 3/8” Zinc Plated Medium Split (5500)
19	2	TL500-100-163	Mud Flap (3/16 x 18 x 24)
20	6	TL500-100-164	Metal Strip Mud Flap
21	1	TL550-200-111	Fuel Filter
22	1	TL550-204-110	Tie Down Strap (Fuel Tank)
23	1	TL5X2-201-108	1/4 Barb x 1/4 NPT Fitting
24	1	TL5X2-500-147	Engine Cover
25	1	TL5X2-500-148	Fuel Cap Cover
26	2	TL5X2-500-149	Heat Shield

Oil Tank

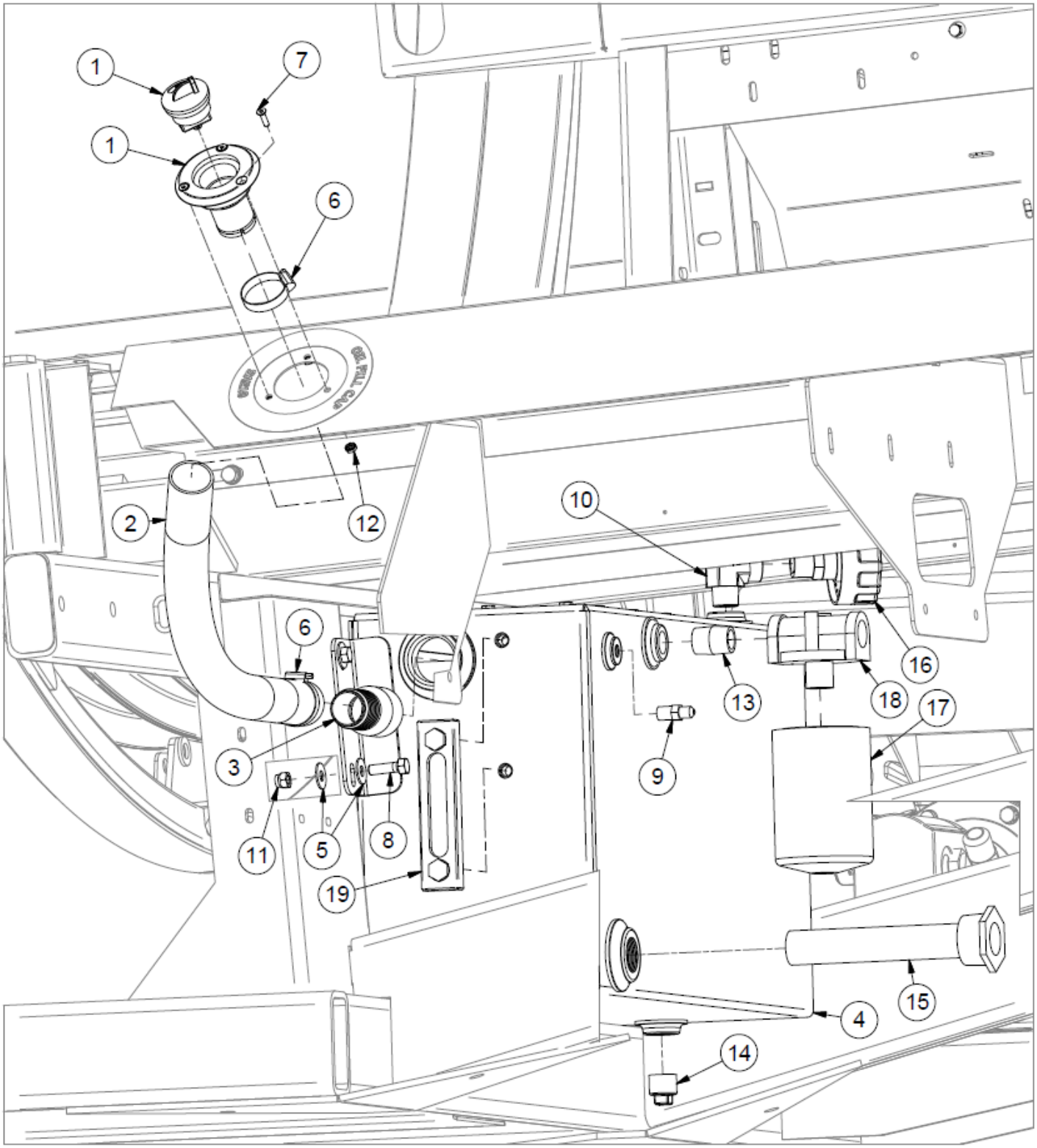

Oil Tank

ITEM	QTY	PART NUMBER	DESCRIPTION
1	1	30870	Hydraulic Oil Fill Ass'y
2	1	30883	TLR5000 Hydraulic Fill Hose
3	1	30894	Barbed Fitting, 1.5 NPT - 1.5 Barb
4	1	31695	ECV, Wrapper, Hydraulic Oil Tank
5	8	FW 3/8	Flatwasher - 3/8" Zinc Plated USS
6	2	GC 24	Gear Clamp #24 1" to 2"
7	3	HB #10-24X0.75 FHSCS	Hex Bolt - 3/16"-24 x 3/4" Flat Socket Cap Screw
8	4	HB 3/8-16X1.25 Z5	Hex Bolt 3/8-16x1 1/4 Grade 5 Zinc Plated Hex Cap Screw
9	1	HF 2404-4-4	Hyd. Fitting - Male JIC - Male Pipe
10	1	HF 5502-12-12	Hyd. Fitting - 90 Deg. Elbow 12-12
11	4	LN 3/8 N	LN 3/8-16 Zinc Plated Nylon Insert Lock Nut
12	3	LN 10-24	K-Lok Locknut
13	1	PI .75 CLOSE NIPPLE	Close Nipple Sch 80 3/4
14	1	TL500-100-174	Magnetic Plug
15	1	TL500-100-175	Suction Strainer
16	1	VAL HB70-B-8	HB70-B-8-L-1-NE-G-1-R Filter Breather
17	1	VAL HEK44	HEK44-20-135-AS-SP010-B Filter Element
18	1	VAL HF620	HF620.20-B17-NE-XA-NA-XB-NA Filter Base
19	1	VAL HL91	HL91-20-T1-T-B Level Gauge

Oil in Unit: AW32 Hydraulic Oil

Filter Cross Reference	
FILTER	**REFERENCE**
Stauf	SF6520
Gresen	F22001
Fram	P1653-A
Fleetguard	HF6510
Cross	1A9021

Throttle Linkage

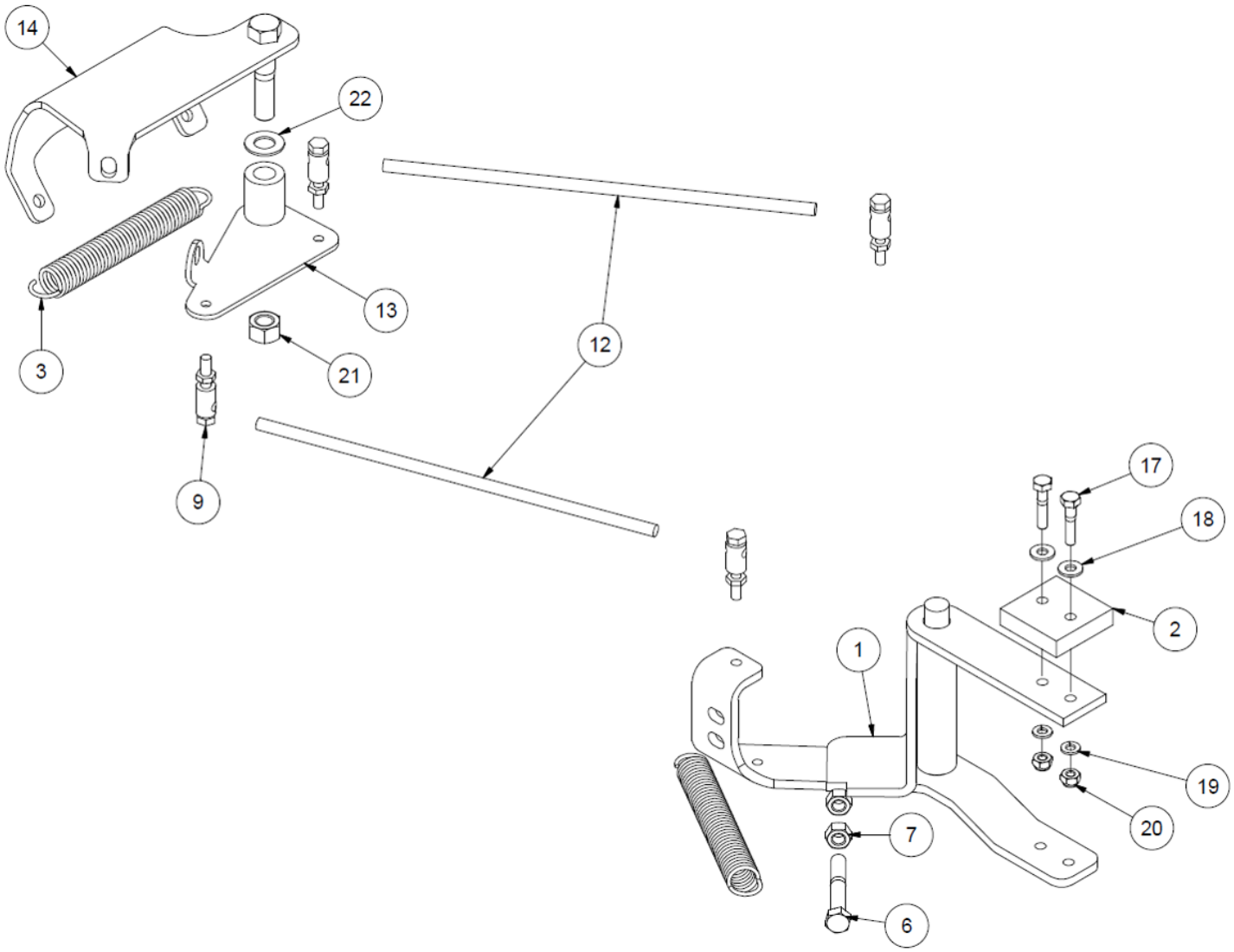

Throttle Linkage

ITEM	QTY	PART NUMBER	DESCRIPTION
1	1	TL5X2-500-154	Main Link
2	1	TL5X2-100-232	Striker Block
	1	TL550-100-069	Throttle Spring
4		TL550-100-065	Ball Joint
5	1	TL5X2-100-231	Control Rod
6	2	HB 3/8-16X2.1/2 Z5	Hex Bolt 3/8”-16 x 2-1/2” Grade 5 Zinc Plated Hex Cap Screw NC
7	2	HN 3/8	Hex Nut 3/8”-16 Grade 5 Zinc Plated Finished NC
8	1	TL599-100-067	13 HP Engine Throttle Base
9		TL550-100-067	Linkage Pivot
10	1	TL599-100-069	1/4-28 UNF Rod x 4
11	1	TL5X2-100-230	13 HP Swing Link
12	2	TL5X2-500-155	1/4-28 UNF Rod x 9 1/2
13	1	TL5X2-500-156	20 HP Swing Link
14	1	TL6X2-120-001	20 HP Engine Throttle Base
15	1	TL6X2-120-004	20 HP Control Rod
16	1	TL5X2-500-157	20 HP Main Link
17	2	HB 1/4-20X1.1/4 Z5	Hex Bolt - 1/4”-20 x 1-1/4” Grade 5 Zinc Plated Hex Cap Screw
18	2	FW 1/4	Flatwasher - 1/4” Zinc Plated USS
19	2	LW 1/4	Lockwasher - 1/4” Zinc Plated Medium Split
20	2	HN 1/4	Hex Nut 1/4”-20 Grade 5 Zinc Plated Finished NC
21	1	LN 1/4 N	Locknuts - 1/4-20 Zinc Plated Nylon Insert
22	1	FWSAE 1/2	Flatwasher, 1/2” Zinc Plated SAE

- 17,18,19,and 20 each have 2 items regardless of the linkage used

13 hp Engine

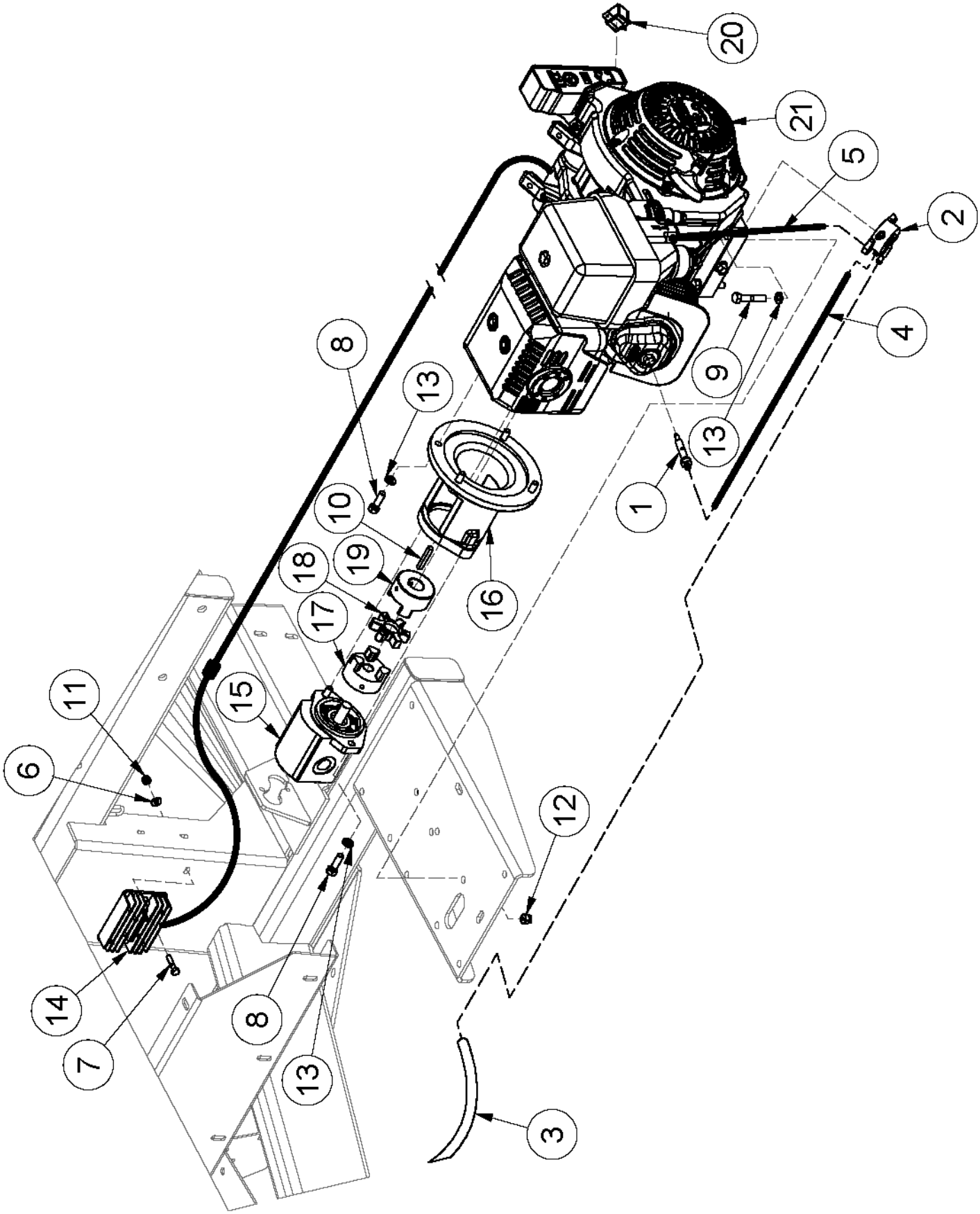

13 hp Engine

ITEM	QTY	PART NUMBER	DESCRIPTION	SERIAL BREAK
1	1	25591	13HP Valve Cover Bolt for Fuel Pump	
2	1	25649	Fuel Pump (Honda #16700Z0J013)	
3	1	40957	Long Fuel Line	
4	1	40962	Piston Discharge Line	
5	1	40963	Engine Fuel Line	
6	2	FW 1/4	Flatwasher - 1/4” Zinc Plated USS	
7	2	HB 1/4-20X1.1/4 Z5	Hex Bolt - 1/4”-20 x 1-1/4” Grade 5 Zinc Plated Hex Cap Screw	
8	6	HB 3/8-16X1.1/4 Z5	Hex Bolt 3/8-16 x 1 1/4” Grade 5 Zinc Plated Hex Cap Screw N.C.	
9	4	HB 3/8-16X2.0 Z5	Hex Bolt 3/8-16 x 2” Grade 5 Zinc Plated Hex Cap Screw N.C.	
10	1	KS40960	Key .25 x 1.75	
11	2	LN 1/4 N	Locknuts - 1/4-20 Zinc Plated Nylon Insert	
12	4	LN 3/8 N	Locknuts - 3/8-16 Zinc Plated Nylon Insert Lock Nut	
13	10	LW 3/8	Lockwasher - 3/8” Zinc Plated Medium Split	
14	1	TL31620-ZG5-033	Honda 20 Amp Rectifier for 13.5 & 20 HP (GX620 Engine Only)	
15	1	TL500-100-181	Hydraulic Pump (13 HP Engine)	
16	1	TL500-100-182	Adapter, Engine to Pump	
17	1	TL500-100-183	Lovejoy Coupling Pump Side	
18	1	TL500-100-184	Coupling Spacer	
19	1	TL500-100-185	Love Joy Coupling Engine Side	
20	1	TL500-100-220	35 AMP Relay	Used up to 12R147
21	1	TL5X2-100-200	13 HP Honda 18 Amp Engine	

20 hp Engine

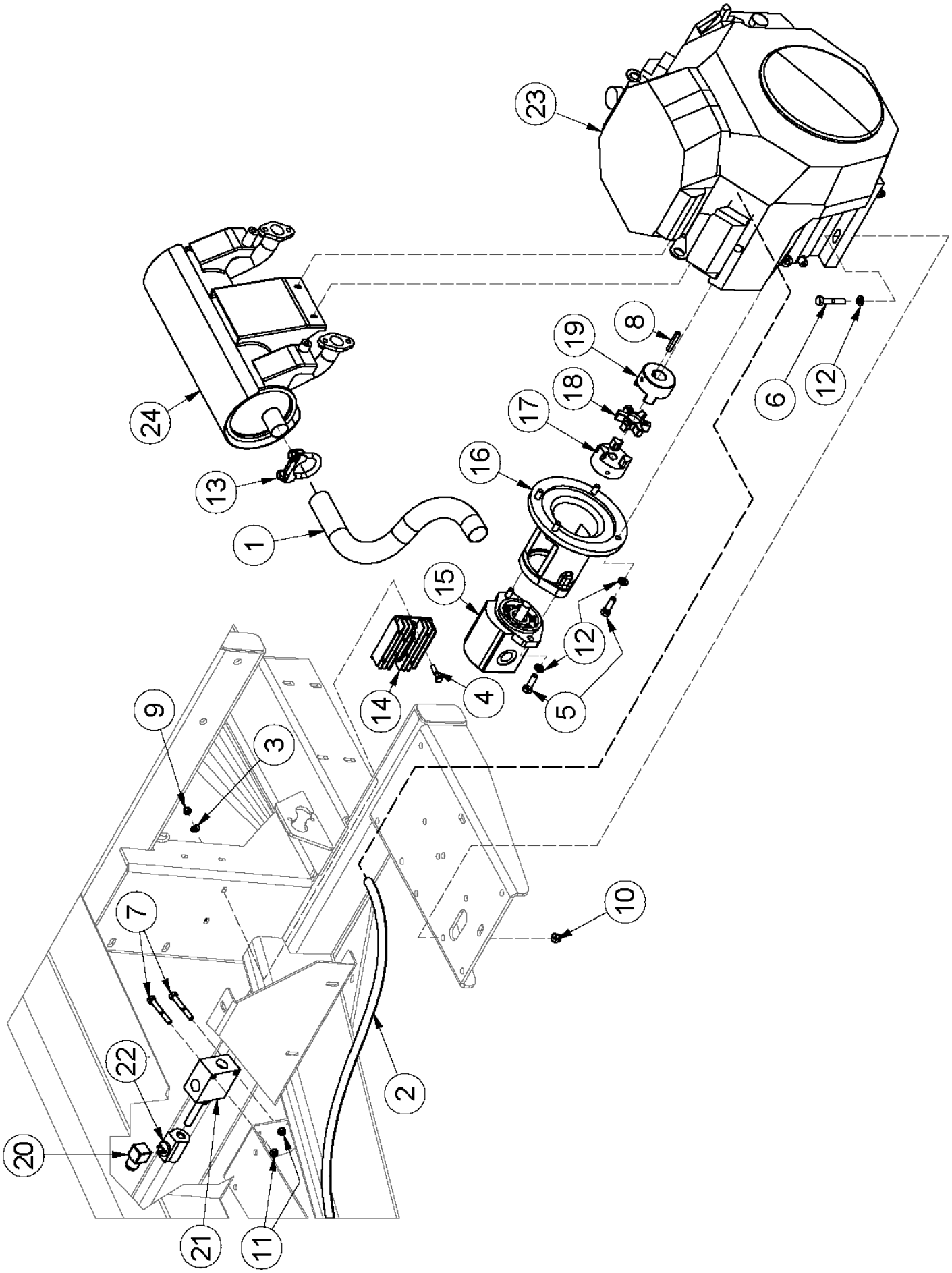

20 hp Engine

ITEM	QTY	PART NUMBER	DESCRIPTION	SERIAL BREAK
1	1	36945	20 HP Muffler Pipe	
2	1	40957	Long Fuel Line	
3	2	FW 1/4	Flatwasher - 1/4” Zinc Plated USS (6480)	
4	2	HB 1/4-20X1.1/4 Z5	Hex Bolt - 1/4”-20 x 1-1/4” Grade 5 Zinc Plated Hex Cap Screw	
5	6	HB 3/8-16X1.1/4 Z5	Hex Bolt 3/8-16 x 1 1/4” Grade 5 Zinc Plated Hex Cap Screw N.C.	
6	4	HB 3/8-16X2.0 Z5	Hex Bolt 3/8-16 x 2” Grade 5 Zinc Plated Hex Cap Screw N.C.	
7	2	HB 5/16-18X2.1/4 Z5	Hex Bolt - 5/16-18 x 2-1/4 Grade 5 Zinc Hex Cap Screw	
8	1	KS40960	Key .25 x 1.75	
9	2	LN 1/4 N	Locknuts - 1/4-20 Zinc Plated Nylon Insert	
10	4	LN 3/8 N	Locknuts - 3/8-16 Zinc Plated Nylon Insert Lock Nut	
11	2	LN 5/16 N	Locknut - 5/16-18 Type NE Zinc Plated Nylon Insert	
12	10	LW 3/8	Lockwasher - 3/8” Zinc Plated Medium Split (5500)	
13	1	MC 1 1/2	Muffler Clamp 1 1/2” Pipe (MC7112)	
14	1	TL31750-Z2E-803	Honda 20AMP Rectifier for GX630 Engine	
15	1	TL5X2-101-181	Hydraulic Pump (20 HP Engine)	
16	1	TL500-100-182	Adapter, Engine to Pump	
17	1	TL500-100-183	Lovejoy Coupling Pump Side	
18	1	TL500-100-184	Coupling Spacer	
19	1	TL500-100-185	Love Joy Coupling Engine Side	
20	1	31305	Wiring Harness for Dump Valve	
21	1	TL6X2-102-202	Dump Valve (Includes Base and Relief)	Up to 13R004
21A	1	31545	Dump Valve Body and Cartridge (20 HP)	13R005 - Current
22	1	TL6X2-102-204	Dump Valve Solenoid (Coil) Round Coil	Up to 13R004
22A	1	31546	Dump Valve Solenoid (Coil)Square Coil	13R005 - Current
23	1	TL6X2-100-200	20 HP Honda Engine	
24	1	TLVHRM6	Muffler	

Film Snap

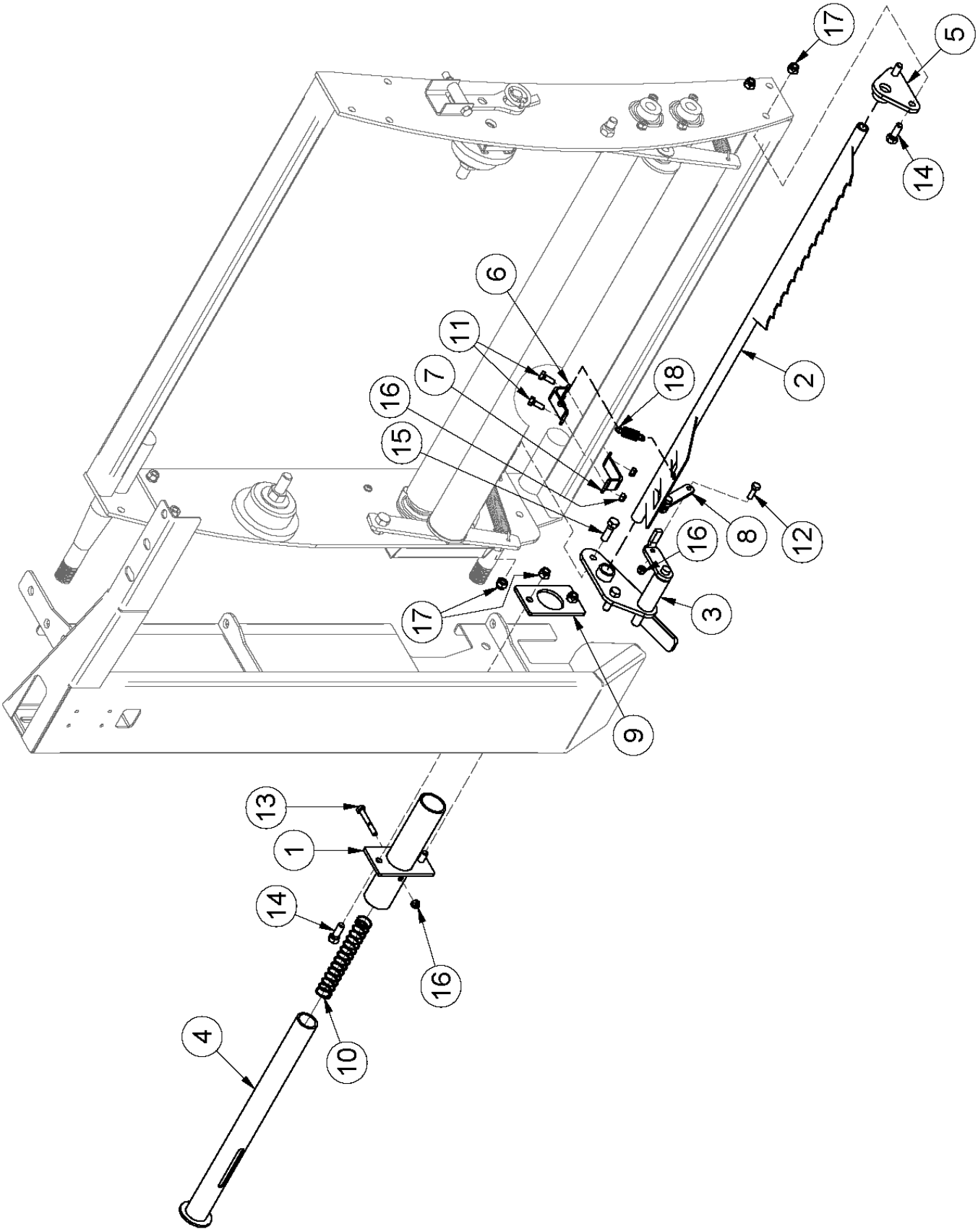

Film Snap

ITEM	QTY	PART NUMBER	DESCRIPTION
1	1	33352	Wrap Cut Tube Support
2	1	33353	Wrap Cut
3	1	33354	Wrap Cut Swivel
4	1	33355	Cut Push Tube
5	1	33356	Pivot Support Bracket
6	1	36021	Spring Mount
7	1	36026	Bracket For Film Snap
8	1	36068	Swivel Plate
9	1	36629	Pipe Support
10	1	36900	Film Snap Compression Spring
11	2	HB 1/4-20X 3/4 Z5	Hex Bolt - 1/4”-20 x 3/4” Grade 5 Zinc Plated Hex Cap Screw NC
12	2	HB 1/4-20X1.0 Z5	Hex Bolt 1/4-20 x 1” Grade 5 Zinc Plated Hex Cap Screw NC
13	1	HB 1/4-20X2.0 Z5	Hex Bolt Plated Gr. 5 NC
14	4	HB 3/8-16X1.0 Z5	Hex Bolt 3/8-16 x 1” Grade 5 Zinc Plated Hex Cap Screw NC
15	2	HB 3/8-16X1.1/4 Z5	Hex Bolt 3/8-16 x 1 1/4” Grade 5 Zinc Plated Hex Cap Screw NC
16	5	LN 1/4 N	Locknuts - 1/4-20 Zinc Plated Nylon Insert
17	6	LN 3/8 N	Locknuts - 3/8-16 Zinc Plated Nylon Insert
18	1	TL500-100-062	Extension Spring

Intentionally Left Blank

Section 3: Hydraulics

Actual parts may vary from illustrations

Front Circuits

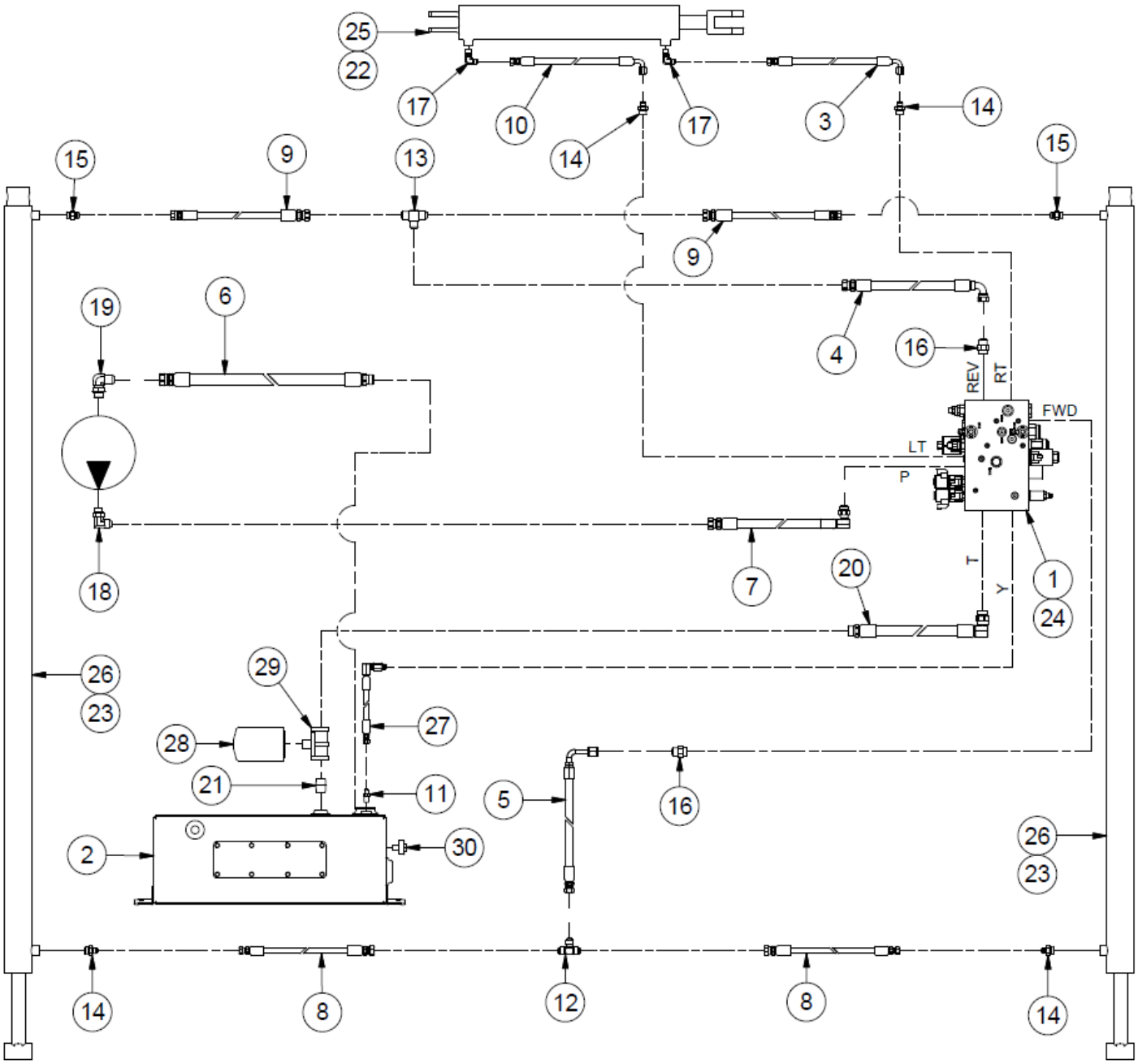

Front Circuits

ITEM	QTY	PART NUMBER	DESCRIPTION
1	1	30298	ECV Bale Wrapper Main Manifold Block
2	1	31695	ECV, Wrapper, Hydraulic Oil Tank
3	1	31775	HH78-6AT1(6FJX90S,6FJX) HCL 78”
4	1	31776	HH61.5-10AT1(10FJX90S,10FJX) HCL61.5”
5	1	31777	HH38-8AT1(10FJX90L,8FJX) HCL 38”
6	1	31779	HH40-12G4H(12MP,12FJX) HCL40”
7	1	31780	HH54-10AT1(10MBX90,10FJX) HCL54.0”
8	2	31799	HH42-6AT1(6FJX,8FJX) HCL 42”
9	2	31938	HH43-8AT1(10FJX,8FJX) HCL 43”
10	1	32501	HH95-6AT1(6FJX90L,6FJX) HCL 95”
11	1	HF 2404-4-4	Hydraulic Fitting - Male JIC - Male Pipe
12	1	HF 2603-8-8-8	Hydraulic Fitting
13	1	HF 2603-10-10-10	Hyd Fitting MJIC to MJIC to MJIC
14	4	HF 6400-6-8	Hydraulic Fitting - Male JIC - Male ORB
15	2	HF 6400-8-8	Hydraulic Fitting - O-Ring to JIC Adapter
16	2	HF 6400-10-10	Hydraulic Fitting - Male JIC - Male ORB
17	2	HF 6801-6-6	Hydraulic Fitting - 90 Degree O-Ring to JIC
18	1	HF 6801-10-10	Forged Fitting - 5/8” JIC x 5/8” SAE 90 Deg. Elbow
19	1	HF 6801-12-12	Forged Fitting - 3/4” JIC X 3/4” SAE 90 Degree Elbow
20	1	31787	HH30- 12G4H(12MP,12MBX90) 30HCL
21	1	PI .75 CLOSE NIPPLE	Close Nipple Sch 80 3/4
22	1	SK AGU201125-10	Seal Kit
23	2	SK25	Seal Kit for Ram Cylinder
24	1	SK1031DBSK	Seal Kit for Main ECV Manifold
25	1	TL500-100-103	Hydraulic Cylinder, 2 x 16
26	2	TL550-100-043	Ram Cylinder
27	1	TLE101-09	Hose - HH25-4ATI(4FJXH-6MBX90)25”HCL
28	1	VAL HEK44	HEK44-20-135-AS-SP010-B Filter Element
29	1	VAL HF620	HF620.20-B17-NE-XA-NA-XB-NA Filter Base
30	1	VAL HL91	HL91-20-T1-T-B Level Gauge

Rear Circuits

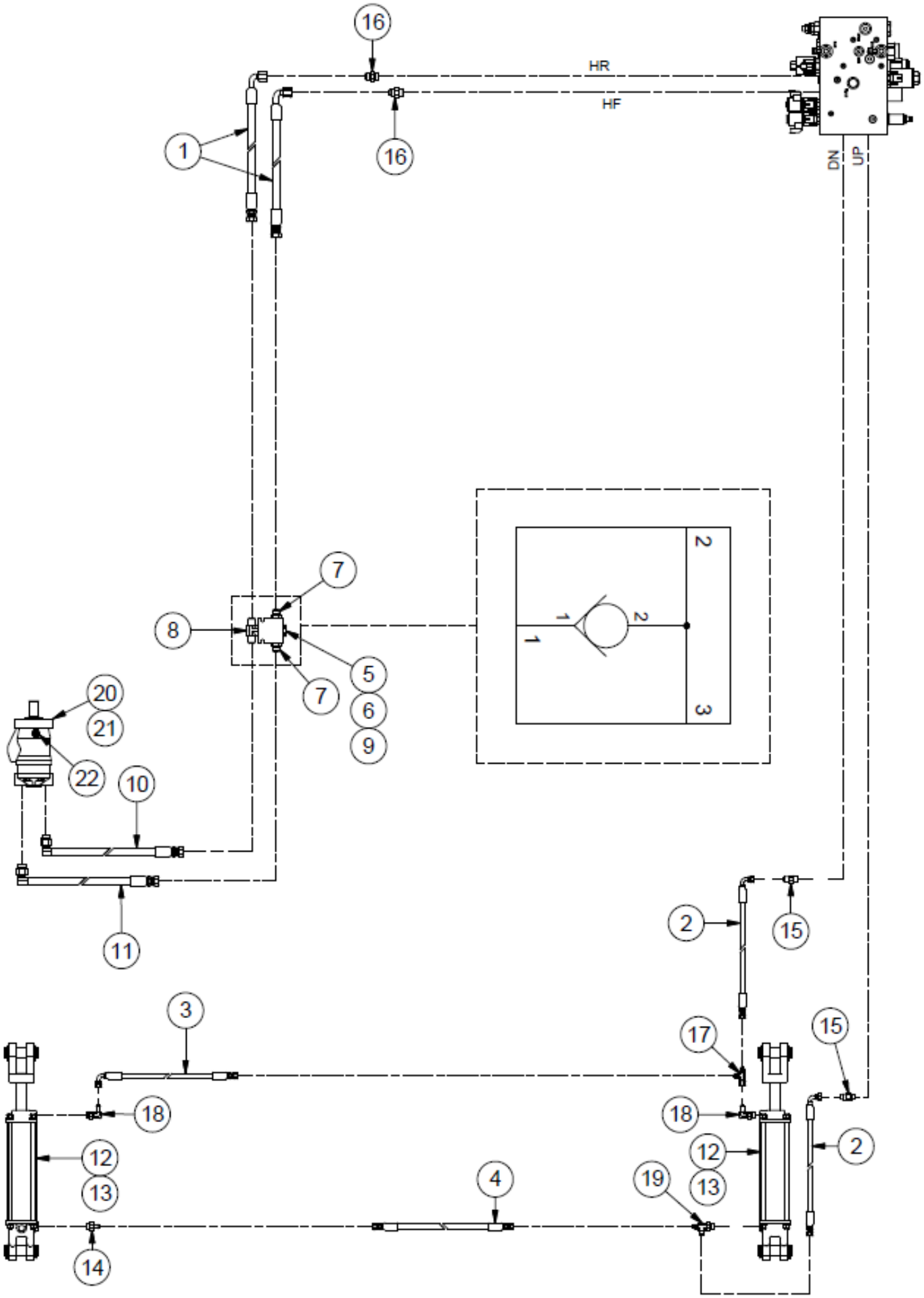

Rear Circuits

ITEM	QTY	PART NUMBER	DESCRIPTION	NOTE
1	2	31778	HH69-8AT1(8FJX90S,8FJX) HCL 69”	
2	2	31781	HH112”-4AT2(6FJX, 6FJX90S)112”HCL	
3	1	31782	HH68”-4AT2(6FJX, 6FJX90S)68”HCL	
4	1	31783	HH54”-4AT2(6FJX, 6FJX)54”HCL	
5	1	32649	ECV Spindown Check Valve Assembly (in Body with Adaptors)	Items 6 - 9
6	1	43576	CV10-20 Spindown Check Valve Cartridge	
7	2	HF 6400-8-8	Hydraulic Fitting - O-Ring to JIC Adapter	
8	1	HF 2601-8-8-8	JIC to Pipe Branch Tee	
9	1	SK43577	CV10-20 Spindown Check Valve Seal Kit	
10	1	32650	HH5 - 8AT1(10MBX90,8FJX) HCL 5”	
11	1	36033	HH10-8AT1(10MBX90,8FJX) HCL 10”	
12	2	36422	Hydraulic Cylinder for TLR5000 Lift Tail	
13	2	SK AGU301250-10	Seal Kit F/Tail Gate (Cylinder 3.0”)	
14	1	HF 6400-4-6	Hydraulic Fitting - Male JIC - Male ORB	
15	2	HF 6400-6-6	Hydraulic Fitting - Male JIC - Male ORB	
16	2	HF 6400-8-8	Hydraulic Fitting - O-Ring to JIC Adapter	
17	1	HF 6602-4-4-4	Hyd Fitting Run Tee M-JIC/F-JIC-M-JIC	
18	2	HF 6801-4-6	Hydraulic Fitting - Male JIC - Male ORB 90 Degree	
19	1	HF 6804-4-6-4	Hyd Fitting - Male JIC - Male ORB Tee	
20	1	VAL MLHPQ200C7URS-NE	Hyd. Motor (Hoop Motor) Rear Ported with Sensor	
21	1	SKMLHPQUDE	Seal Kit 400 Motor	
22	1	32665	ECV Hoop Speed Sensor	

Manifold Ports

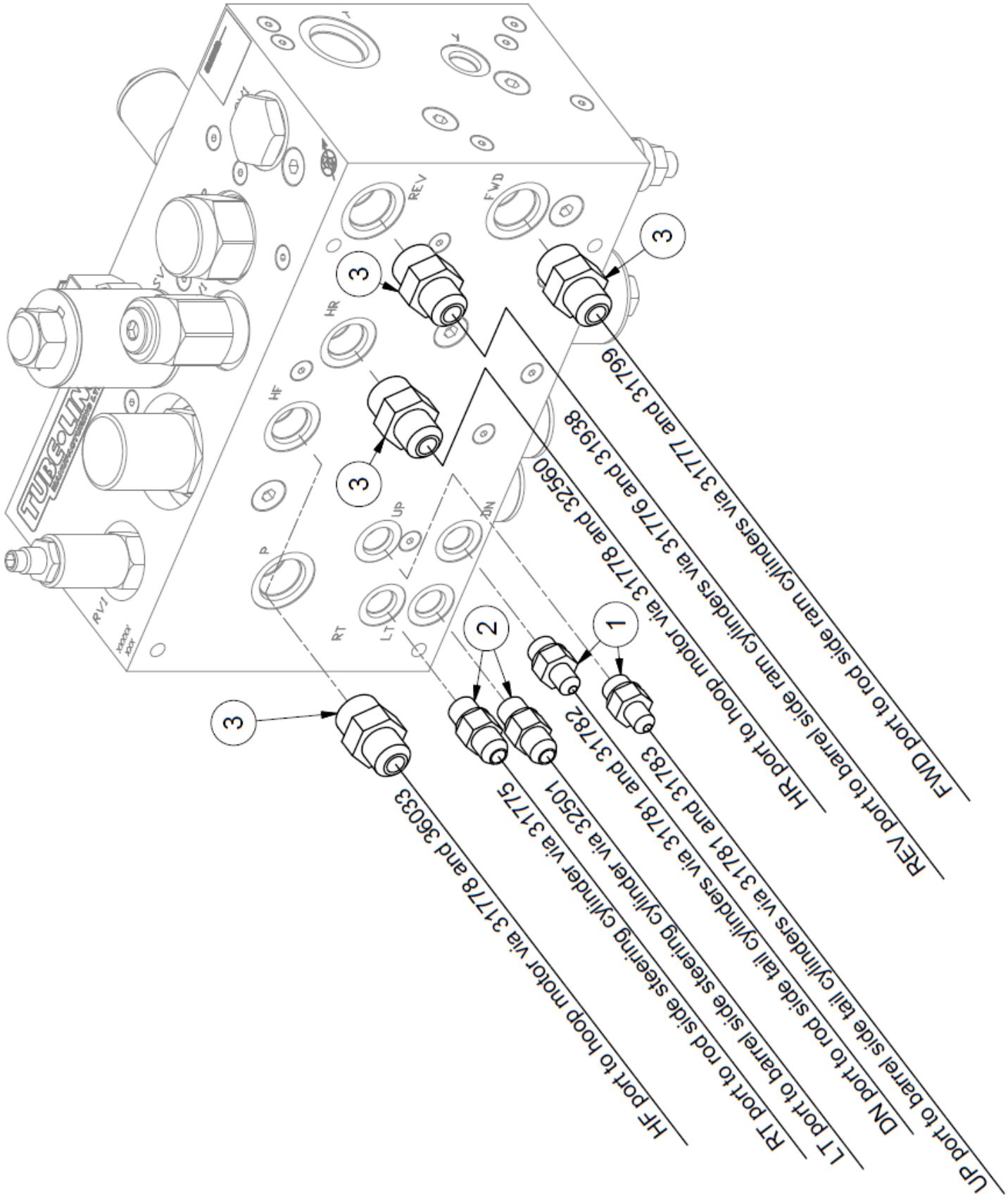

Manifold Ports

ITEM	QTY	PART NUMBER	DESCRIPTION
1	2	HF 6400-4-6	Hydraulic Fitting - Male JIC - Male ORB
2	2	HF 6400-6-6	Hydraulic Fitting - Male JIC - Male ORB
3	4	HF 6400-8-10	Hydraulic Fitting - Male JIC - Male ORB

Manifold Valves

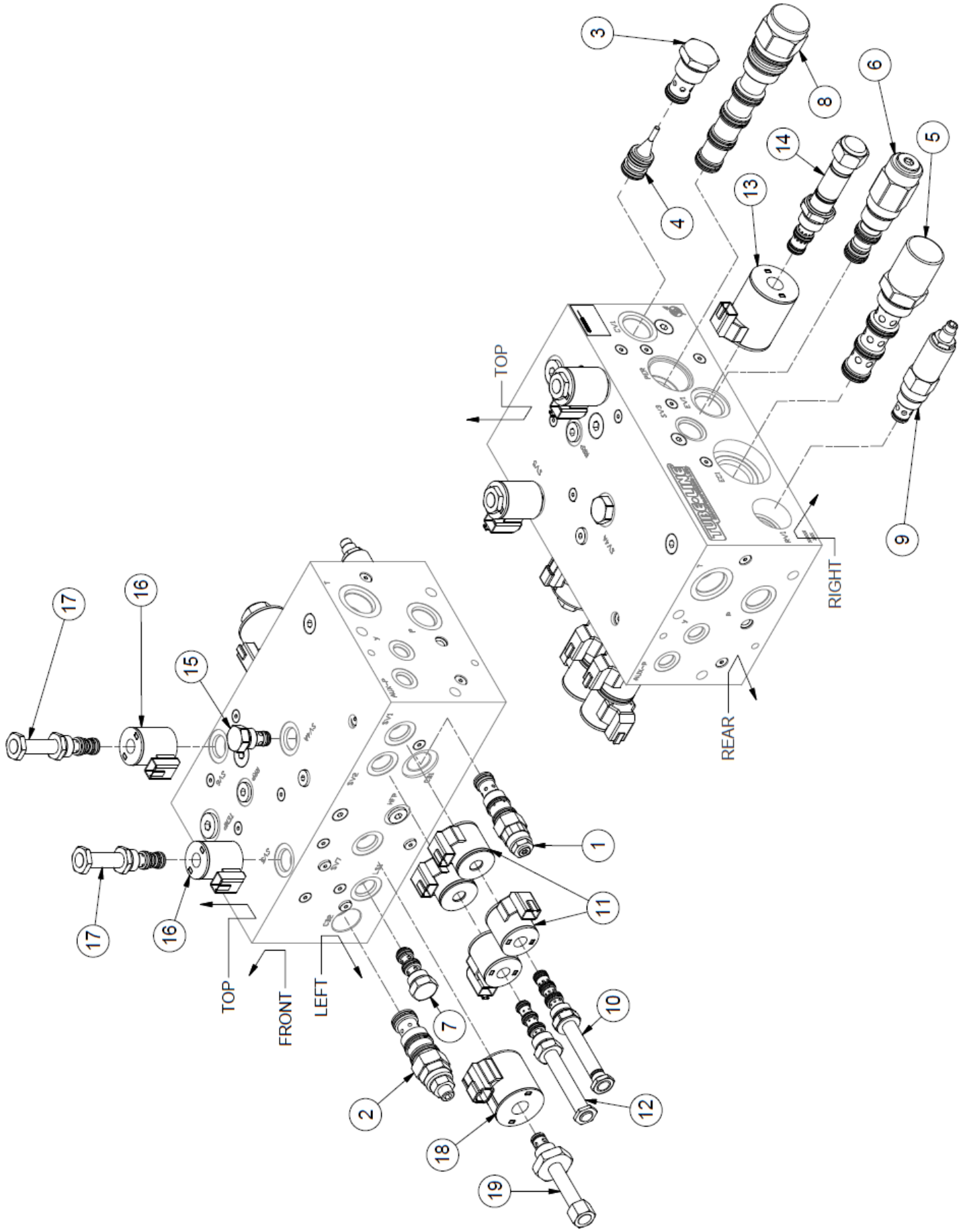

Manifold Valves

ITEM	QTY	PORT	PART NUMBER	DESCRIPTION
1	1	CB1	40981	Counter Balance Valve
2	1	CB2	43664	Counter Balance Valve
3	1	CV1	43667	Check Valve
4	1	CV1	43668	Pilot Piston
5	1	EC1	43626	Cartridge Logic Valve
6	1	EV1	43625	Cartridge Logic Valve
7	1	LS1	43627	Shuttle Valve
8	1	PER	43665	Directional Valve
9	1	RV1	43663	Relief Valve
10	1	SV1	43669	Solenoid Valve
11	4	SV1, SV2	43629	12V DC Solenoid Valve Coil
12	1	SV2	32664	Solenoid Valve
13	1	SV3	43660	12V DC Solenoid Valve Coil
14	1	SV3	43661	Pilot Flow Control Solenoid Valve
15	1	SV4A	43662	Flow Control Valve
16	2	SV5,SV6	43628	12V DC Solenoid Valve Coil
17	2	SV5,SV6	43666	Pilot Reducing Solenoid Valve
18	1	SV7	43670	12V DC Solenoid Valve Coil
19	1	SV7	38784	Pilot Relief Solenoid Valve

Intentionally Left Blank

Section 4: Electrical

Actual parts may vary from illustrations

Main Electrical Harness

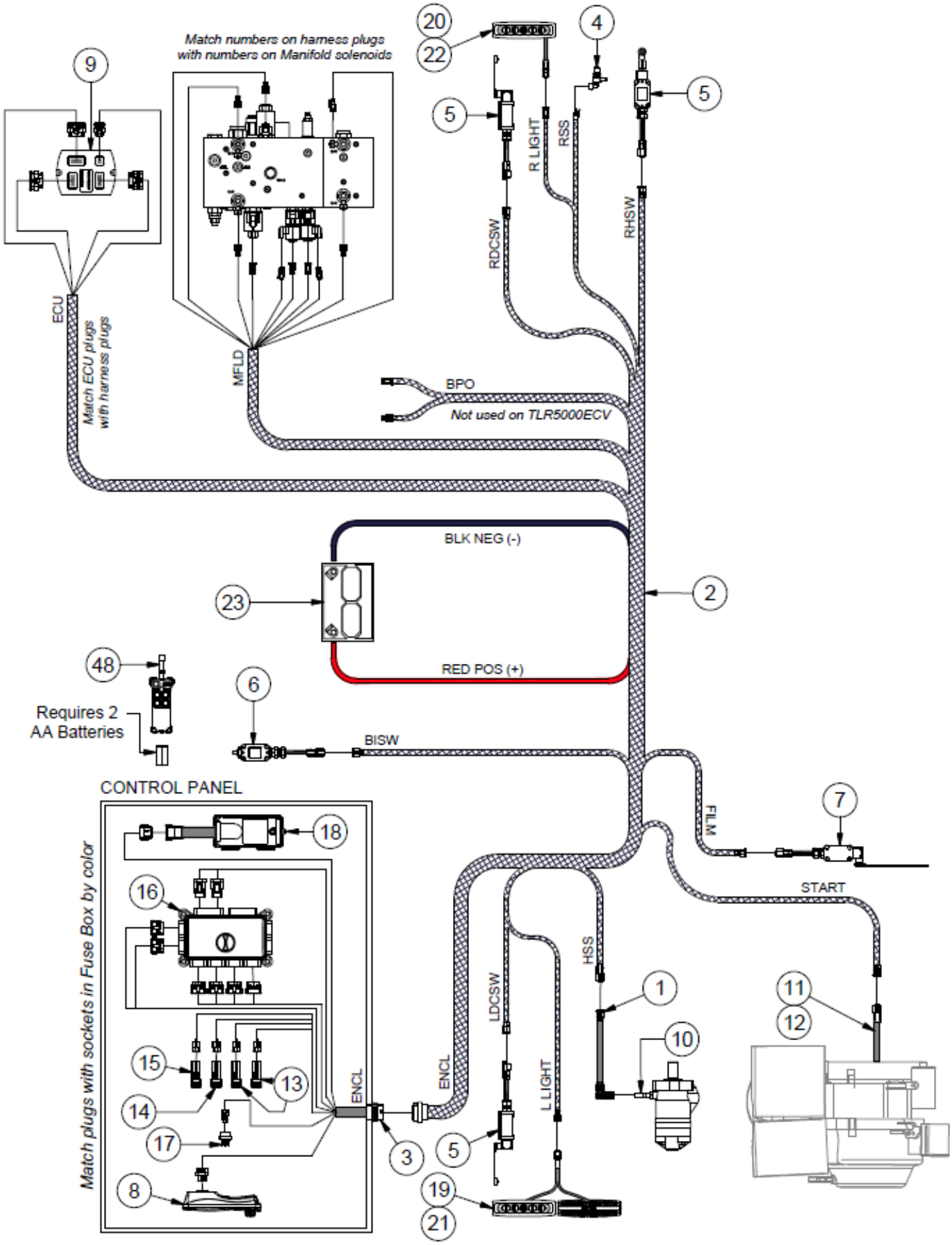

Main Electrical Harness

ITEM	QTY	PART NUMBER	DESCRIPTION
1	1	32607	ECV Wrapper and Liner, M12 to Duetch Jumper
2	1	32625	ECV Wrapper, Main Wiring Harness
3	1	32626	ECV Wrapper, Panel Harness
4	1	32632	ECV Wrapper and Liner, Speed Sensor
5	3	32633	ECV Wrapper, Left and Right Door Switch, Ram Home Switch
6	1	32634	ECV Wrapper, Bale Trigger Switch
7	1	32635	ECV Wrapper, Film Sensor Switch
8	1	32647	ECV Controller - 2415 Programmed for ECV Wrapper
9	1	32652	ECV, ECU Programmed for Balewrapper (Current Rev)
10	1	32665	ECV Hoop Speed Sensor
11	1	32666	Wiring Engine Harness for 13 HP Honda - ECV Wrapper
12	1	32667	Wiring Engine Harness for 20 HP Honda - ECV Wrapper
13	2	33322	Light Function Switch & Remote Engine By-pass
14	1	33322-L	Function Switch with Light ON-OFF
15	1	33323	Function Switch for E-Stop
16	1	33324	Fuse Box for ECV Wrapper Control Box
17	1	33325	Steering Joystick for ECV
18	1	36968	Remote Control Reciever & Antenna
19	1	43617	TLNWLKLED-ECV Twin Harness
20	1	43618	TLNWLKLED-ECV Single Harness
21	1	43619	TLNWLK-ECV Twin Harness
22	3	43620	TLNWLK-ECV Single Harness
23	1	TLBATSP35	SP-35 Interstate Battery
24	1	TLHHCX2HD	Hand Held Remote (Orange)

Battery

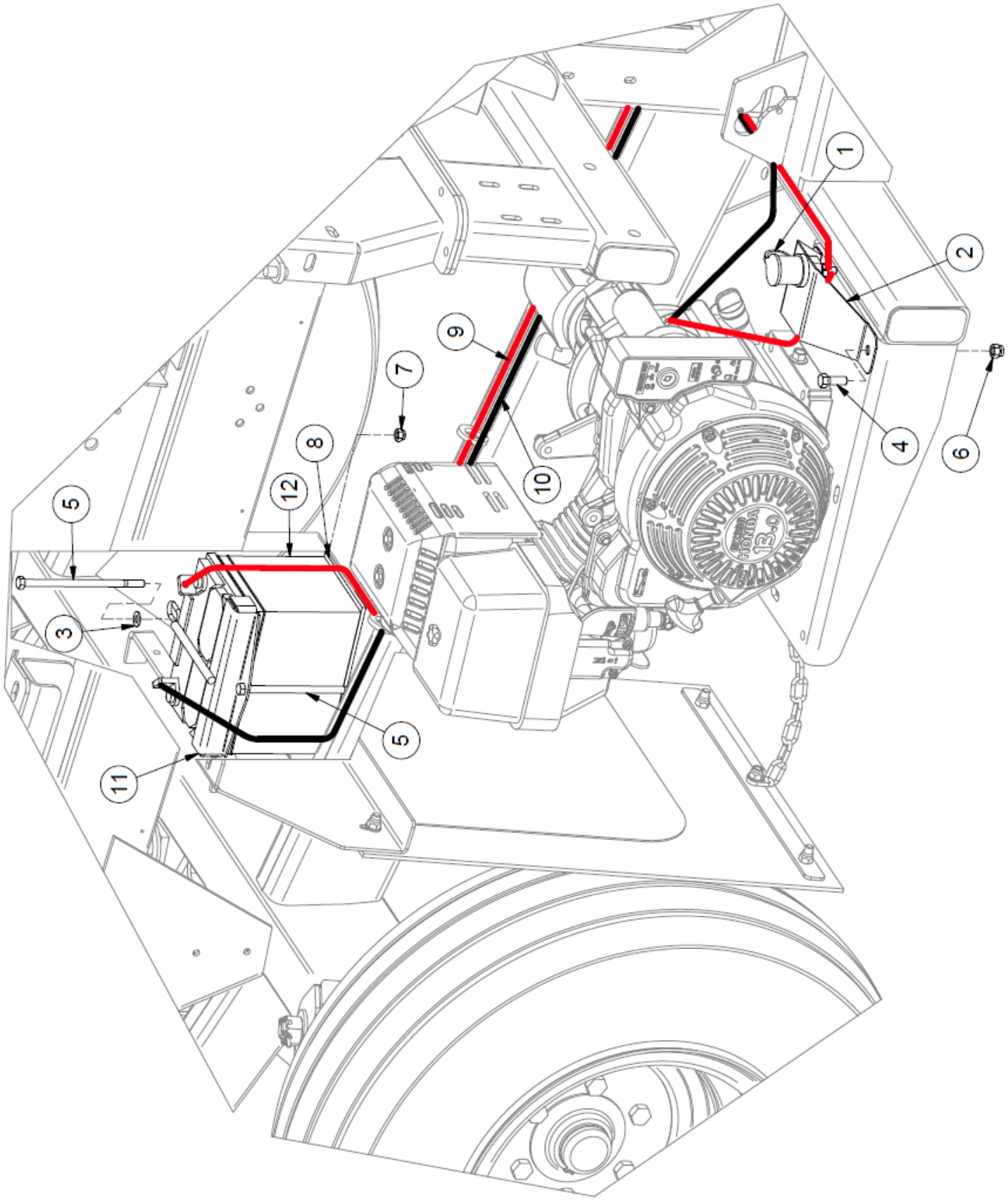

Battery

ITEM	QTY	PART NUMBER	DESCRIPTION
1	1	30873	Battery Post
2	1	31383	Insulated Jumper Mount
3	1	FW 5/16	Flatwasher - 5/16” Zinc Plated USS
4	2	HB 3/8-16X1 Z5	Hex Bolt 3/8-16x1 Grade 5 Zinc Plated Hex Cap Screw
5	2	HB 5/16-18X6 Z5	Hex Bolt 5/16-18x6 Grade 5 Zinc Plated Hex Cap Screw
6	2	LN 3/8 N	LN 3/8-16 Zinc Plated Nylon Insert Lock Nut
7	2	LN 5/16 N	LN 5/16-18 Zinc Plated Nylon Insert Lock Nut
8	1	TL5X2-007-101	Battery Rubber, 3/16 x 5 x 8 Mud Flap
9	1	TL5X2-500-159	Red Battery Cable
10	1	TL5X2-500-160	Black Battery Cable
11	1	TL500-301-221	Battery Hold-Down
12	1	TLBATSP35	SP-35 Interstate Battery

Control Panel

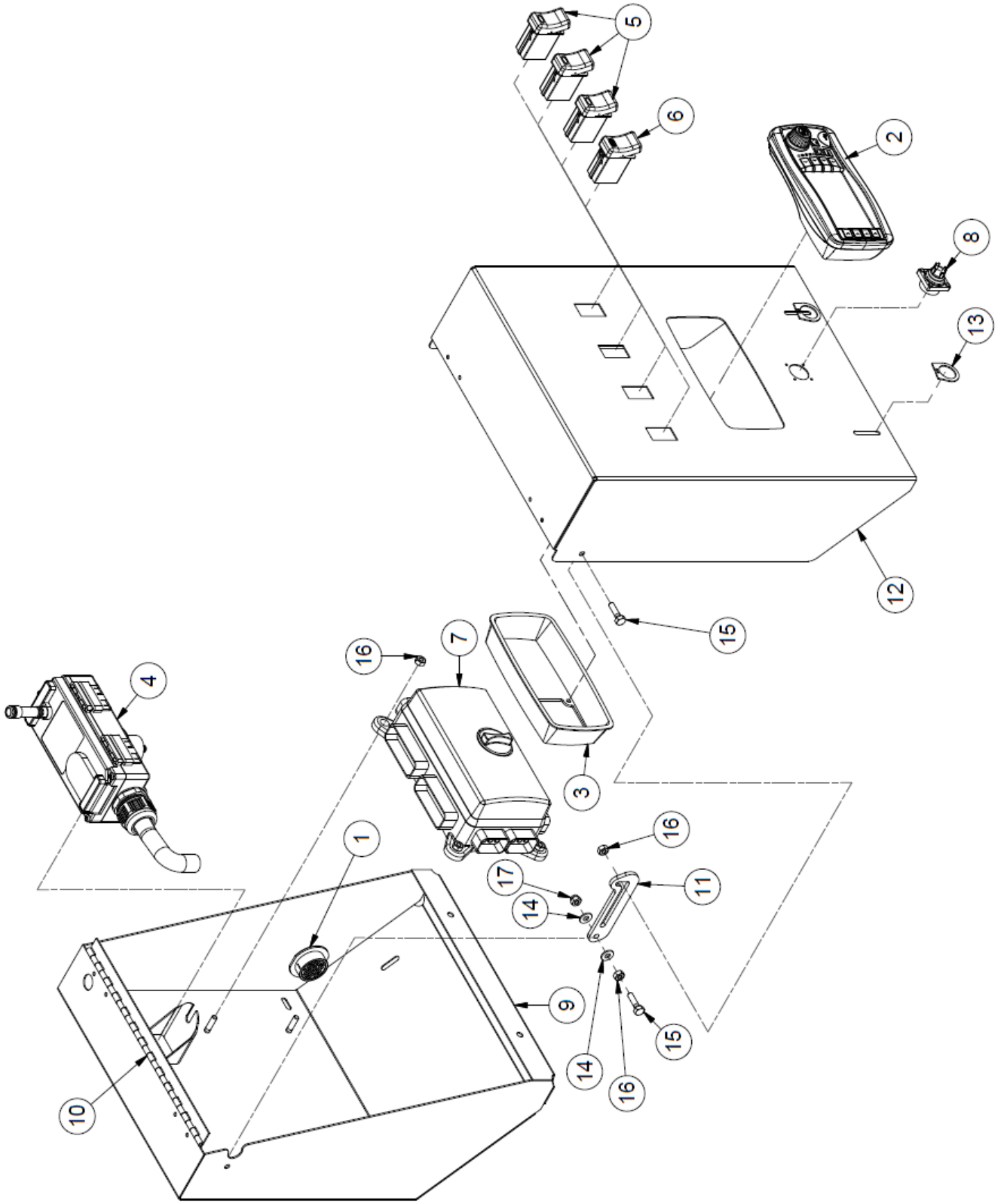

Control Panel

ITEM	QTY	PART NUMBER	DESCRIPTION
1	1	32626	ECV Wrapper, Panel Harness
2	1	32629	ECV Display Screen
3	1	32630	ECV Wrapper, Dashboard Mount
4	1	32648	Remote Receiver (ECV Wrapper)
5	3	33322	Light Function Switch & Remote Engine By-pass
6	1	33323	Function Switch for E-Stop
7	1	33324	Fuse Box for ECV Wrapper Control Box
8	1	32624	ECV, Thumbstick Power Drive & Steering
9	1	35610	Control Panel Box
10	2	35633	ECV Control Panel Piano Hinge
11	1	35637	Control Panel Link
12	1	35623	ECV Control Panel Face
13	2	36268	Cam Lock
14	4	FW 1/4	Flatwasher - 1/4” Zinc Plated USS
15	2	HB 1/4-20X1 Z5	Hex Bolt 1/4-20x1 Grade 5 Zinc Plated Hex Cap Screw
16	6	HN 1/4	Hex Nut 1/4”-20 Grade 5 Zinc Plated Finished
17	2	LN 1/4 N	LN 1/4-20 Zinc Plated Nylon Insert Lock Nut

Table Trigger

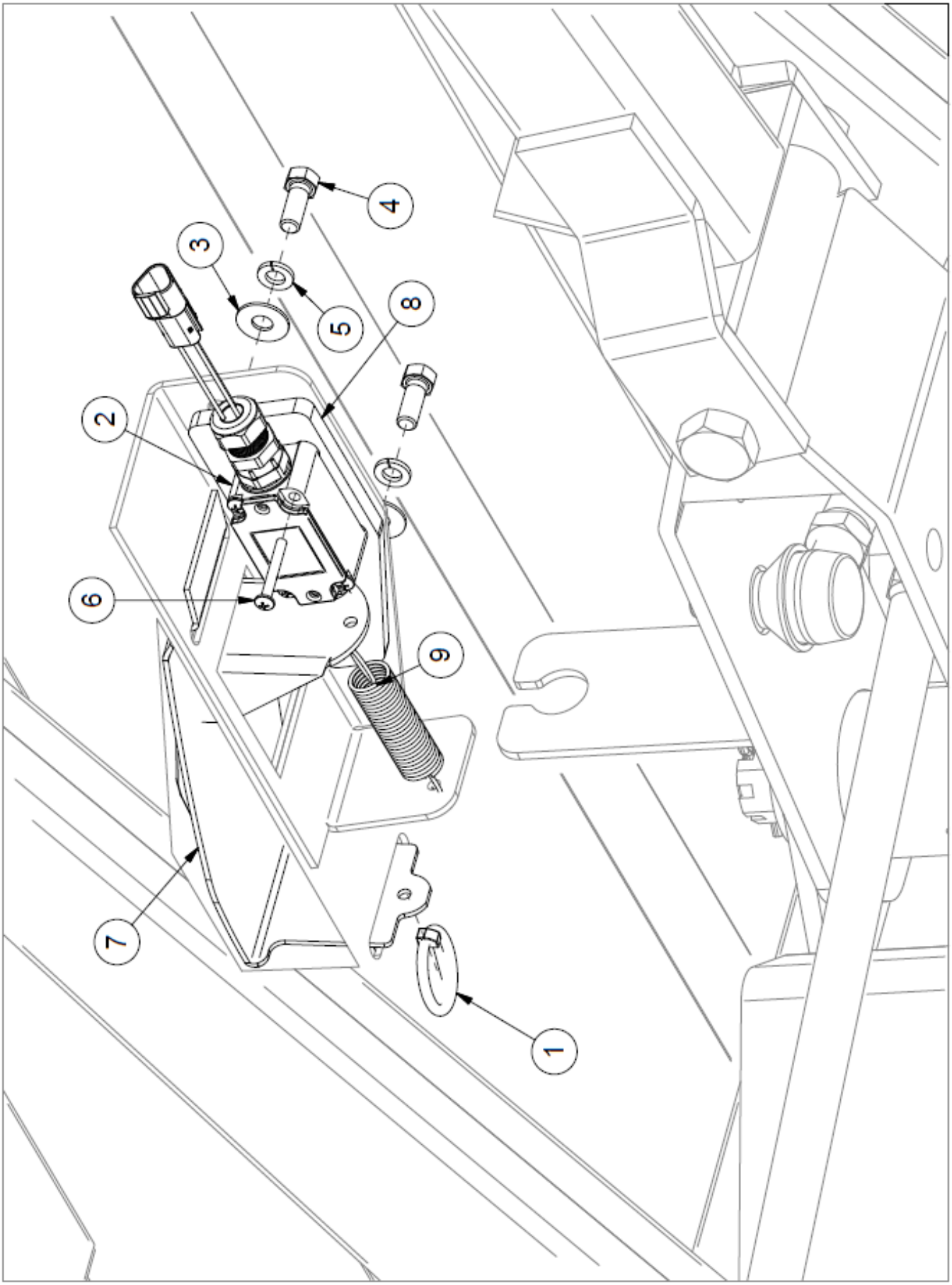

Table Trigger

ITEM	QTY	PART NUMBER	DESCRIPTION
1	1	25680	Lynch Pin 3/16 x 1.5
2	1	32634	ECV Wrapper, Bale Trigger Switch
3	2	FW 3/8	Flatwasher - 3/8” Zinc Plated USS
4	2	HB 3/8-16X1 Z5	Hex Bolt 3/8-16x1 Grade 5 Zinc Plated Hex Cap Screw
5	2	LW 3/8	LW - 3/8” Zinc Plated Medium Split
6	4	MS #10X24X1.5	Machine Screw - (Inch)
7	1	TL5X2-500-152	Trigger Weldment
8	1	TL5X2-500-153	Table Switch Mount Plate
9	1	TL550-100-069	Throttle Spring

Intentionally Left Blank

Section 5: Optional Features

Actual parts may vary from illustrations

TLHPD5000ECV - Single Power Drive

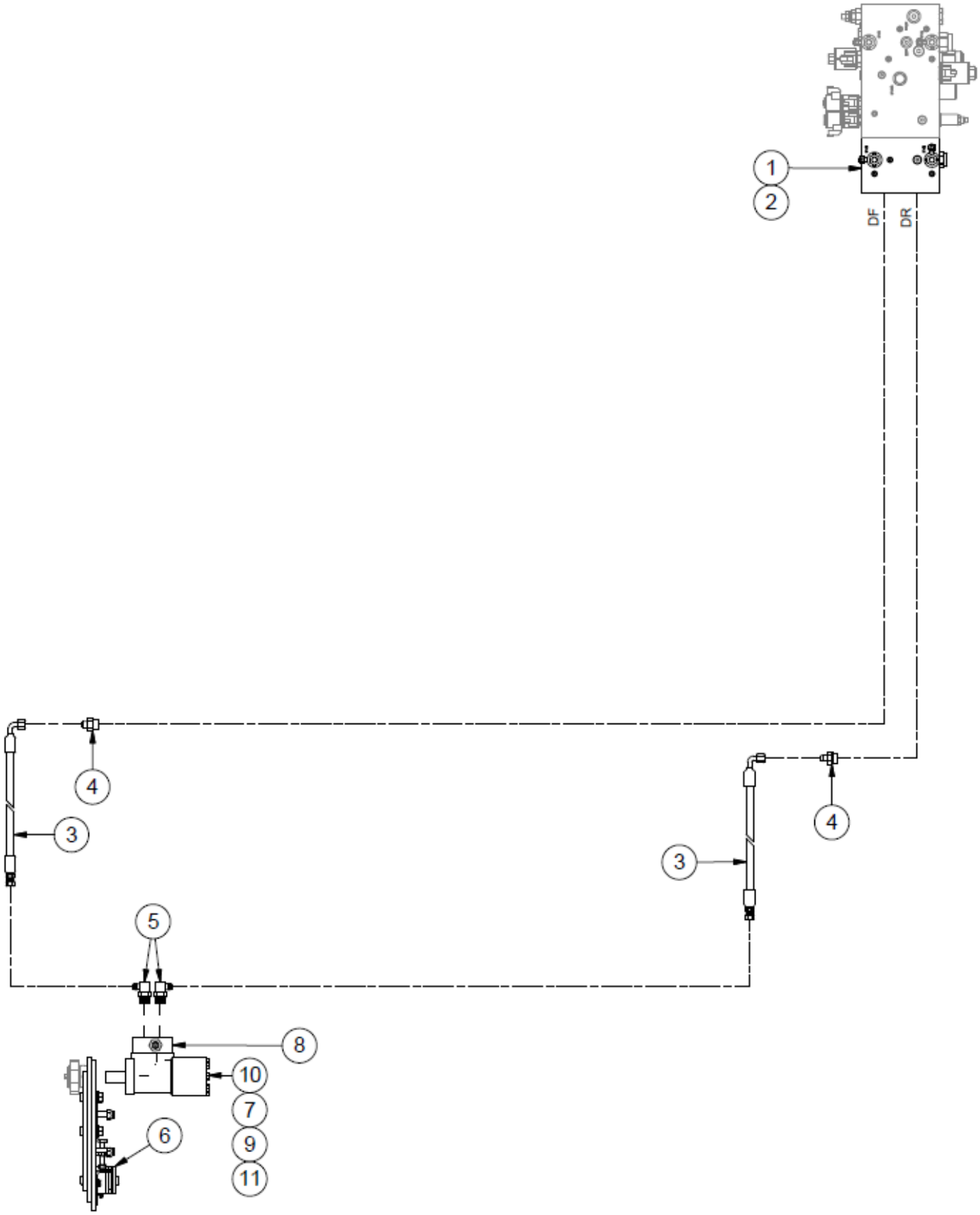

TLHPD5000ECV - Single Power Drive

ITEM	QTY	PART NUMBER	DESCRIPTION	NOTE
1	1	30299	ECV Bale Wrapper Powerdrive Block	
2	1	SK1032AASK	ECV Powerdrive Manifold Seal Kit	
3	2	31785	HH156 - 6AT1-(6FJXH-6FJX90S)-HCL-156 Hose Assy.	
4	2	HF 6400-6-10	Hyd Fitting -Male JIC - Male ORB	
5	2	HF 6801-6-10	Hyd. Fitting -Male JIC - Male ORB 90 Degree Elbow	
6	1	TL109-100-360	Power Drive Assembly	Refer to Pg.2-36
7	1	TL550-200-138	Hydraulic Motor c/w Crossover	Items 8-11
8	1	30856	Hydraulic Cross Port Relief for Motor- Spreaders	
9	4	HB 5/16-18X1.1/2 SHCS	Hex Bolt - 5/16-18 x 1 1/2” Socket Head Cap Screw	
10	1	VAL 1008	Motor, Hydraulic - (BS208107A)	
11	1	SKMLHPQUDE	Seal Kit 400 Motor	

TLHPDD5000ECV - Dual Power Drive Hydraulics

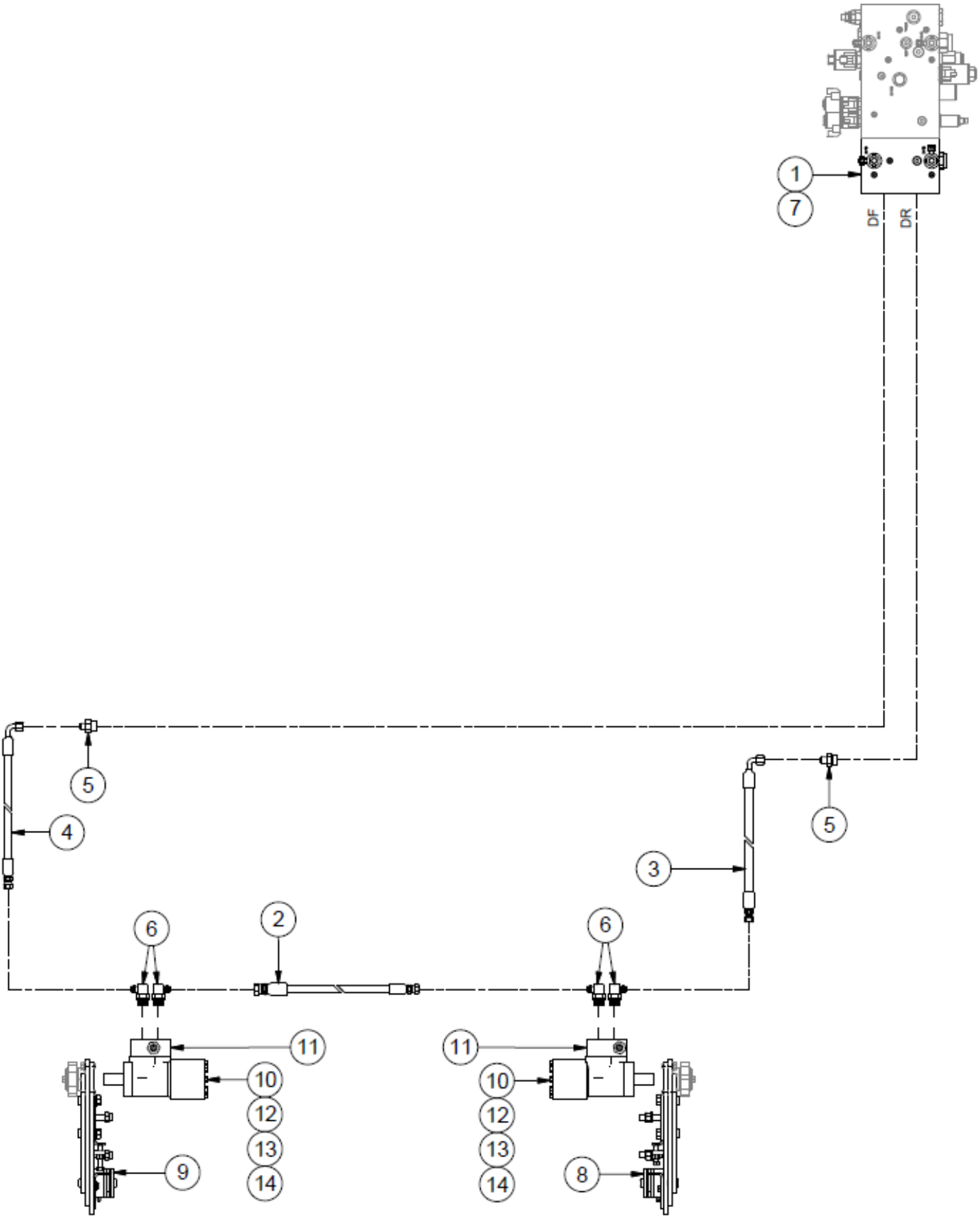

TLHPDD5000ECV - Dual Power Drive Hydraulics

ITEM	QTY	PART NUMBER	DESCRIPTION	NOTE
1	1	30299	ECV Bale Wrapper Powerdrive Block	
2	1	31784	HH93 - 6ATI(6FJX,6FJX) 93” E/E	
3	1	31785	HH156 - 6AT1-(6FJXH-6FJX90S)-HCL-156 Hose Assy.	
4	1	31786	HH203 - 6AT1-(6FJXH-6FJX90S)-HCL-203 Hose Assy.	
5	2	HF 6400-6-10	Hyd Fitting -Male JIC - Male ORB	
6	4	HF 6801-6-10	Hyd. Fitting -Male JIC - Male ORB 90 Degree Elbow	
7	1	SK1032AASK	ECV Powerdrive Manifold Seal Kit	
8	1	TL109-100-355	Power Drive Assembly	Refer to Pg.5-6
9	1	TL109-100-360	Power Drive Assembly	Refer to Pg.2-34
10	2	TL550-200-138	Hydraulic Motor c/w Crossover	Items 11-14
11	1	30856	Hydraulic Cross Port Relief for Motor- Spreaders	
12	4	HB 5/16-18X1.1/2 SHCS	Hex Bolt - 5/16-18 x 1 1/2” Socket Head Cap Screw	
13	1	VAL 1008	Motor, Hydraulic - (BS208107A)	
14	2	SKMLHPQUDE	Seal Kit 400 Motor	

Single Power Drive Assembly

Fig.1

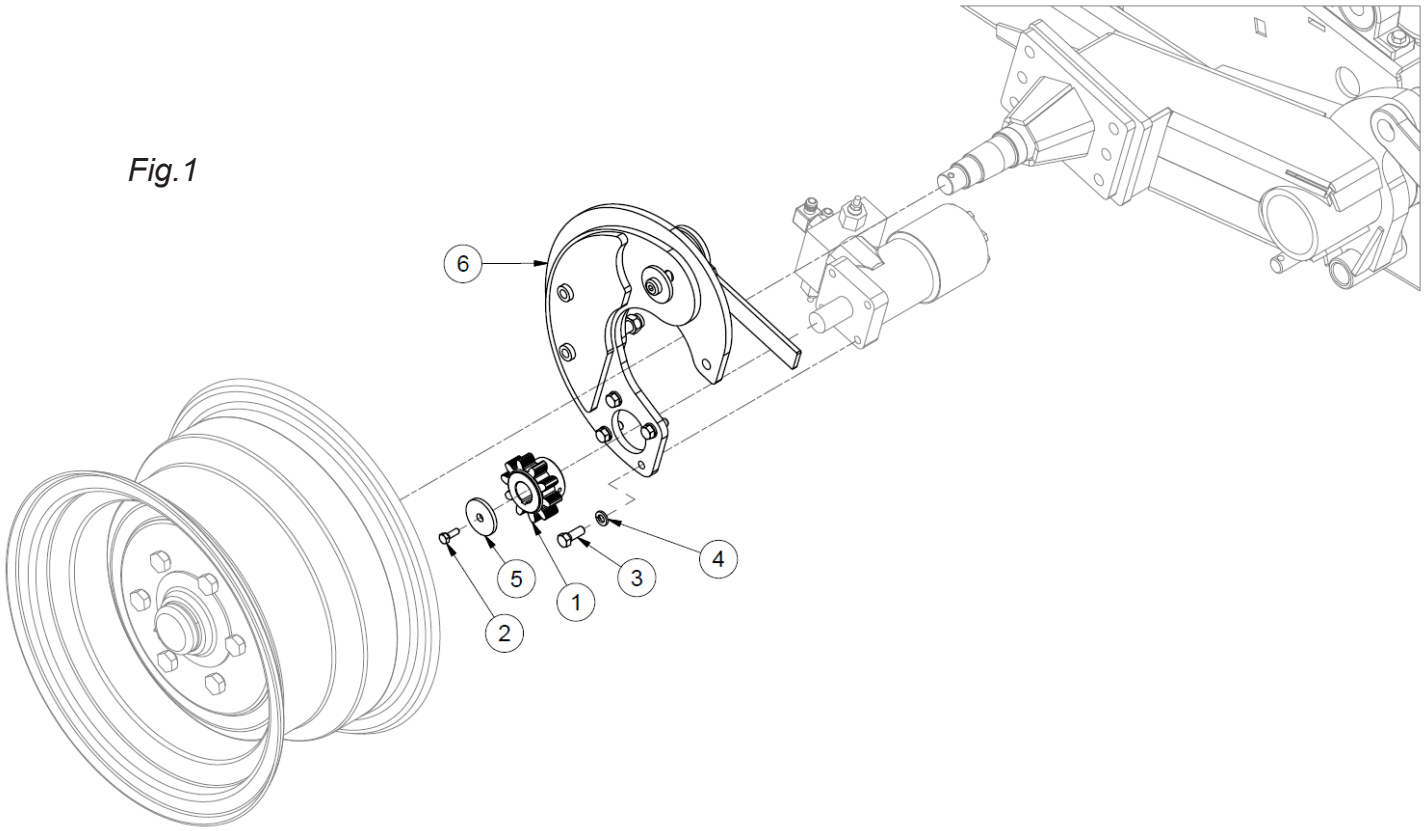

Dual Power Drive Assembly

(Fig.1 + Fig.2)

Fig.2

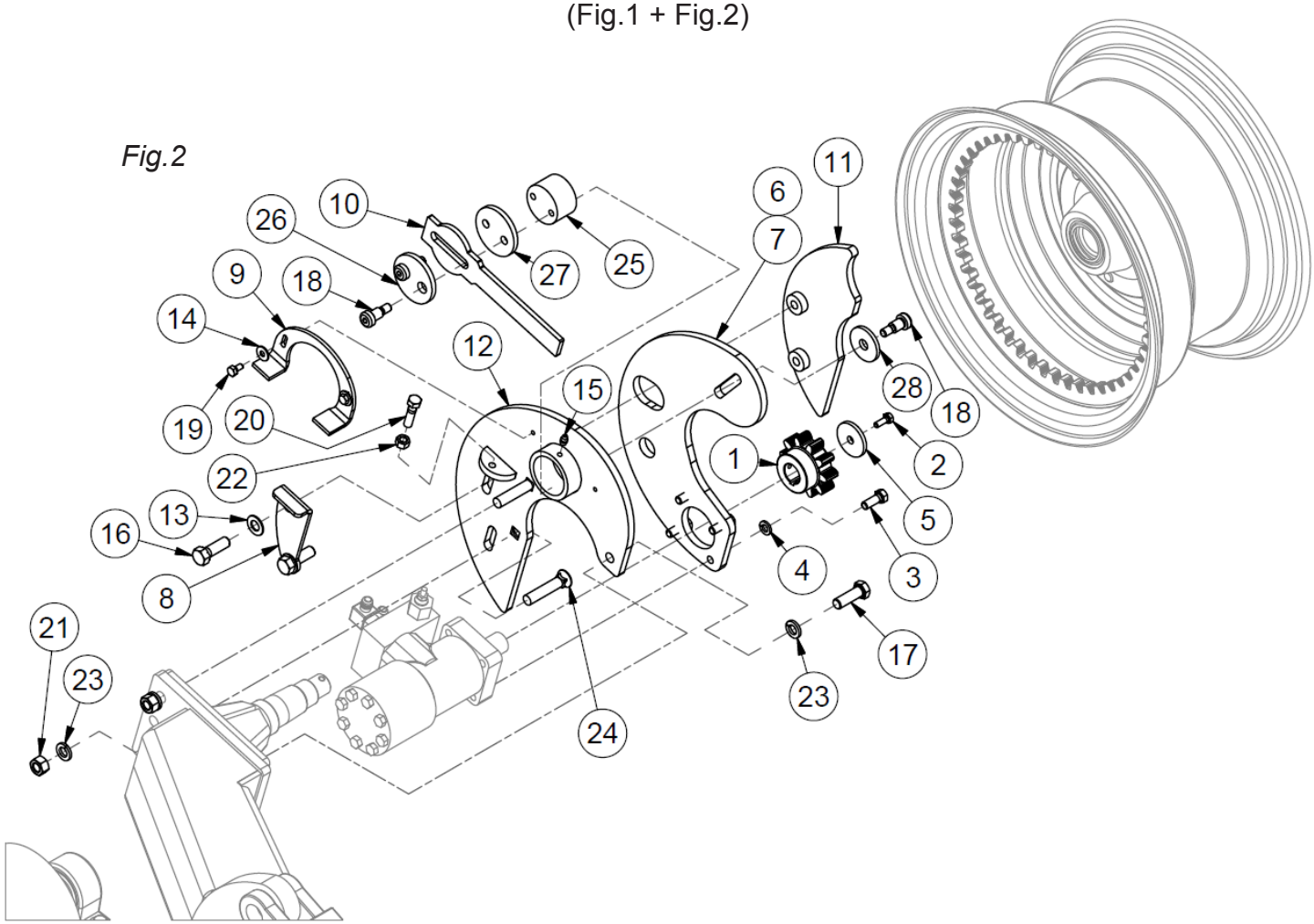

Single Power Drive Assembly

Fig.1

ITEM	QTY	PART NUMBER	DESCRIPTION	NOTE
1	1	28772	Power Drive Sprocket 2009 UP	
2	1	HB 1/4-20X0.75 Z5	Hex Bolt 1/4-20x3/4 Grade 5 Zinc Plated Hex Cap Screw	
3	4	HB 3/8-16X1 Z5	Hex Bolt 3/8-16x1 Grade 5 Zinc Plated Hex Cap Screw	
4	4	LW 3/8	LW - 3/8” Zinc Plated Medium Split	
5	1	TL500-100-060	Wheel Hub Washer	
6	1	TL109-100-360	Brake Assembly	Refer to Pg.2-34

Dual Power Drive Assembly

(Fig.1 + Fig.2)

Fig.2

ITEM	QTY	PART NUMBER	DESCRIPTION	NOTE
1	2	28772	Power Drive Sprocket 2009 UP	
2	2	HB 1/4-20X0.75 Z5	Hex Bolt 1/4-20x3/4 Grade 5 Zinc Plated Hex Cap Screw	
3	2	HB 3/8-16X1 Z5	Hex Bolt 3/8-16x1 Grade 5 Zinc Plated Hex Cap Screw	
4	24	LW 3/8	LW - 3/8” Zinc Plated Medium Split	
5	2	TL500-100-060	Wheel Hub Washer	
6	1	TL109-100-355	Power Drive Assembly	Items 7-28
7	1	25116	Drive Engaging Plate	
8	1	25119	Outside Plate Guide	
9	1	25121	Handle Lock	
10	1	25122	Handle	
11	1	25123	Bolt On Plate	
12	1	25124	Plate - Power Drive Weldment	
13	2	FW 1/2	Flatwasher - 1/2” Zinc Plated USS	
14	2	FW 1/4	Flatwasher - 1/4” Zinc Plated USS	
15	1	GR 1/4 X 28	Grease Fitting 1/4-28 Straight-Standard Zerk	
16	2	HB 1/2-13X1.5 Z5	Hex Bolt 1/2-13x1 1/2 Grade 5 Zinc Plated Hex Cap Screw	
17	1	HB 1/2-20 X1.5 YZ8	Hex Bolt 1/2-20x1 1/2 Grade 8 Zinc Hex Cap Screw	
18	3	HB 1/2X5/8 SS	Socket Head Shoulder Screws - 1/2 Shldr x 5/8 x 3/8-16	
19	2	HB 1/4-20X0.5 Z5	Hex Bolt 1/4-20x1/2 Grade 5 Zinc Plated Hex Cap Screw	
20	1	HB 3/8-16X1.5 Z5	Hex Bolt 3/8-16x1 1/2 Grade 5 Zinc Plated Hex Cap Screw	
21	2	HN 1/2	Hex Nut 1/2”-13 Grade 5 Zinc Plated Finished	
22	1	HN 3/8	Hex Nut 3/8”-16 Grade 5 Zinc Plated Finished	
23	3	LW 1/2	LW - 1/2” Zinc Plated Medium Split	
24	2	PB 1/2-13X2.5	Plow Bolts - 1/2-13 x 2 1/2 Flat Head Gr.5	
25	1	TLWHEEL9	Power Drive Eccentric	
26	1	WHEEL2012	Outside Handle Washer	
27	1	WHEEL20121	Inside Handle Washer	
28	1	WHEEL2013	Inside Cam Washer	

Power Drive Manifold Ports

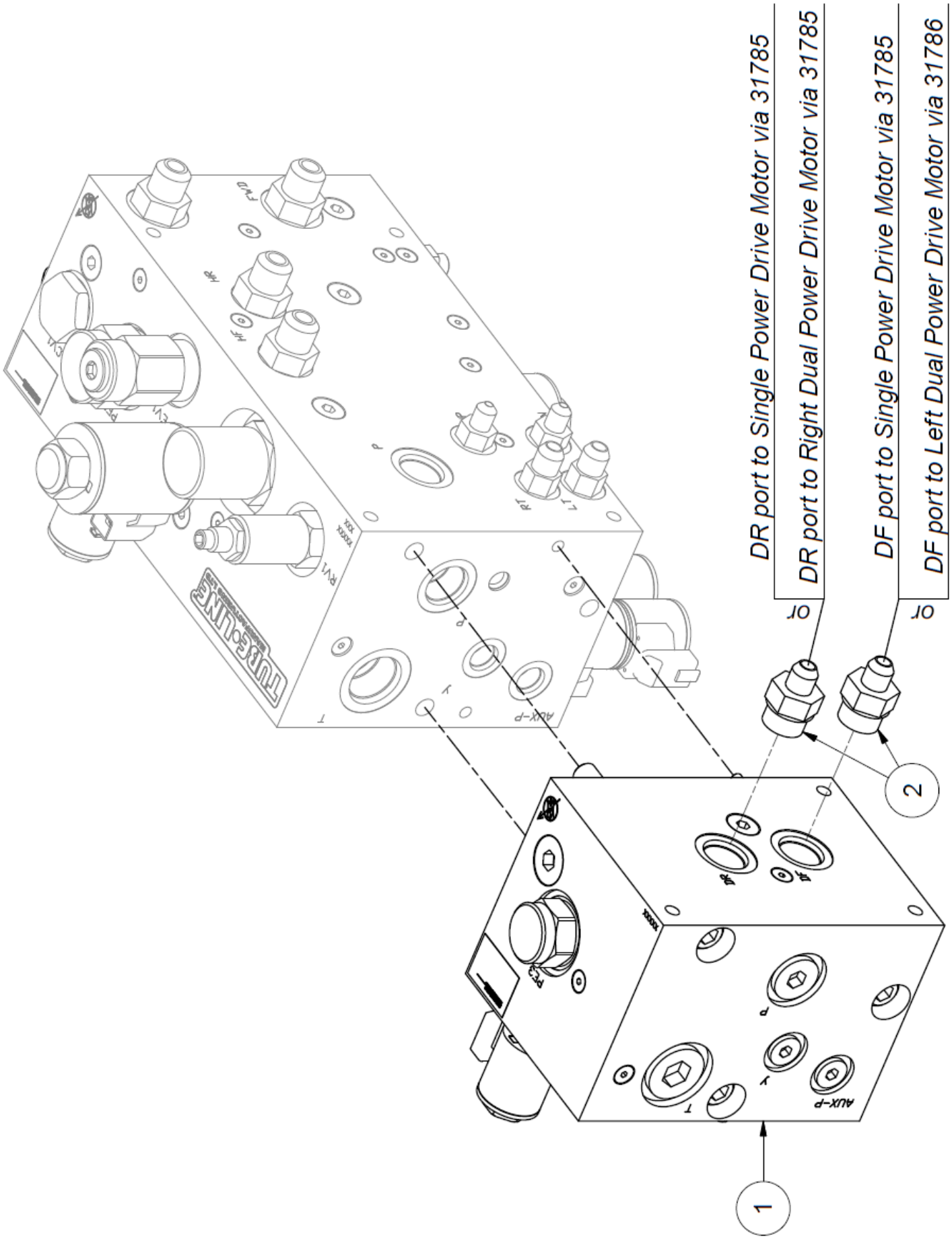

Power Drive Manifold Ports

ITEM	QTY	PART NUMBER	DESCRIPTION
1	1	30299	ECV Bale Wrapper Powerdrive Block
2	2	HF 6400-6-10	Hydraulic Fitting - Male JIC - Male ORB

Power Drive Manifold Valves

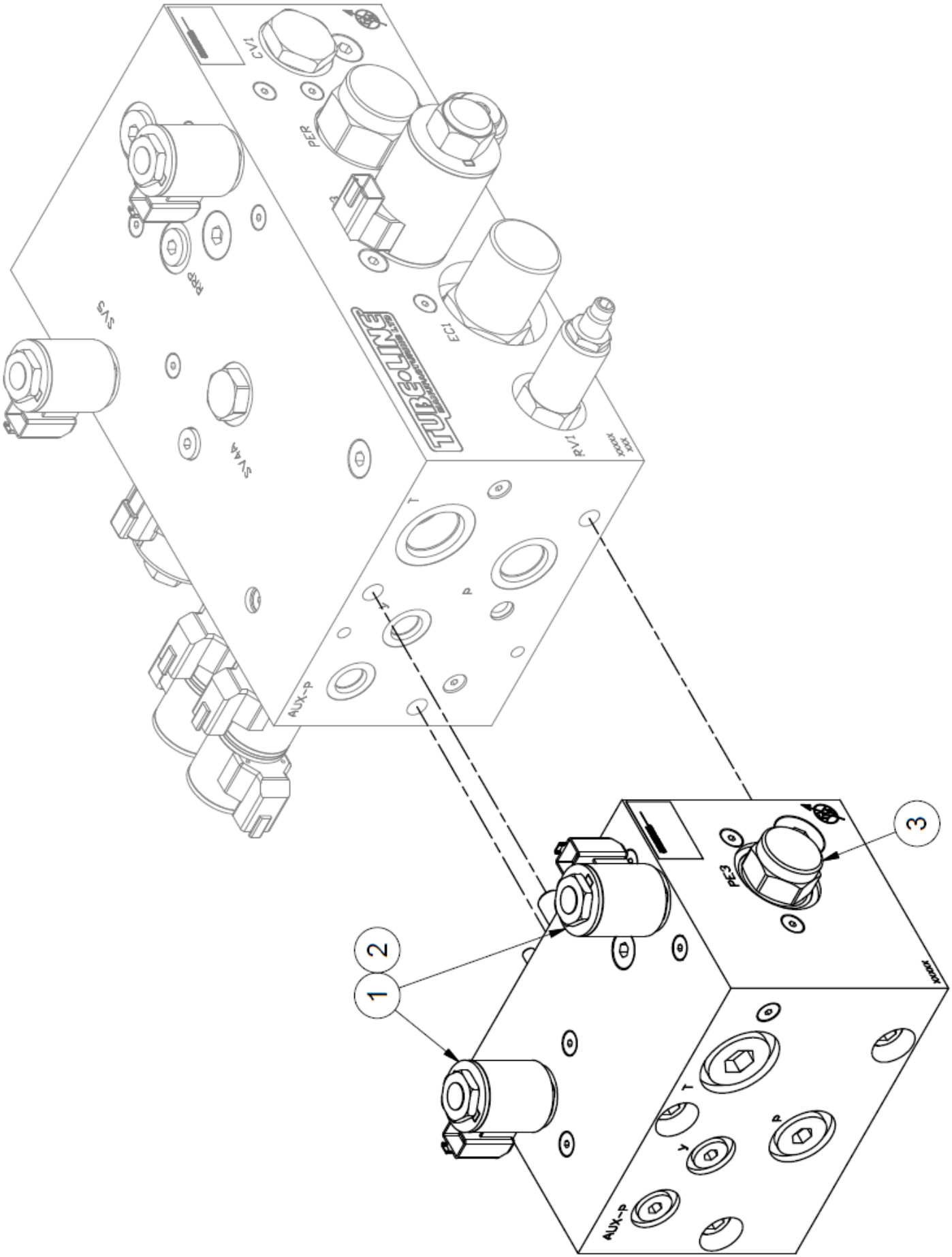

Power Drive Manifold Valves

ITEM	QTY	PORT	PART NUMBER	DESCRIPTION
1	2	SV8, SV9	43666	Pilot Reducing Solenoid Valve
2	2	SV8, SV9	43628	12V DC Solenoid Valve Coil
3	1	PE3	43671	Directional Valve

TLNWLK-ECV - Night Light Kit

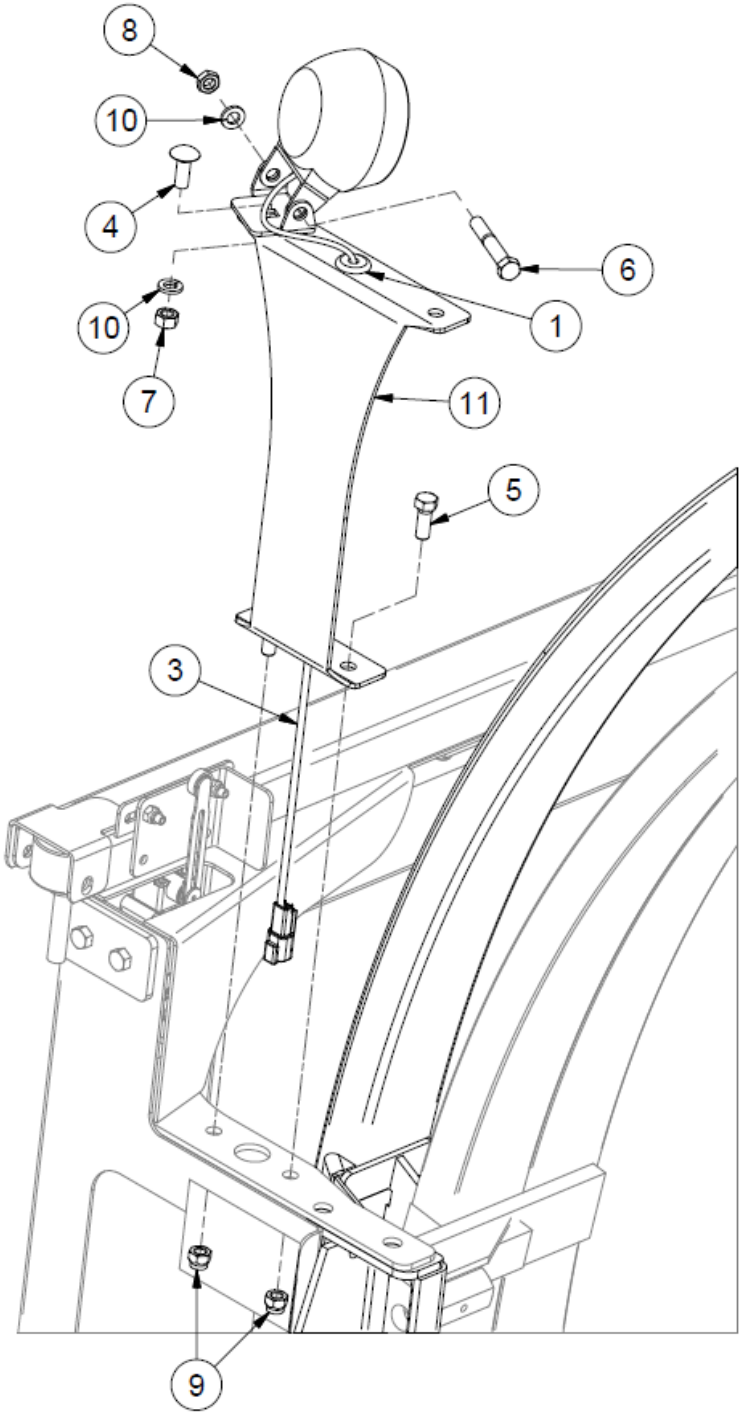

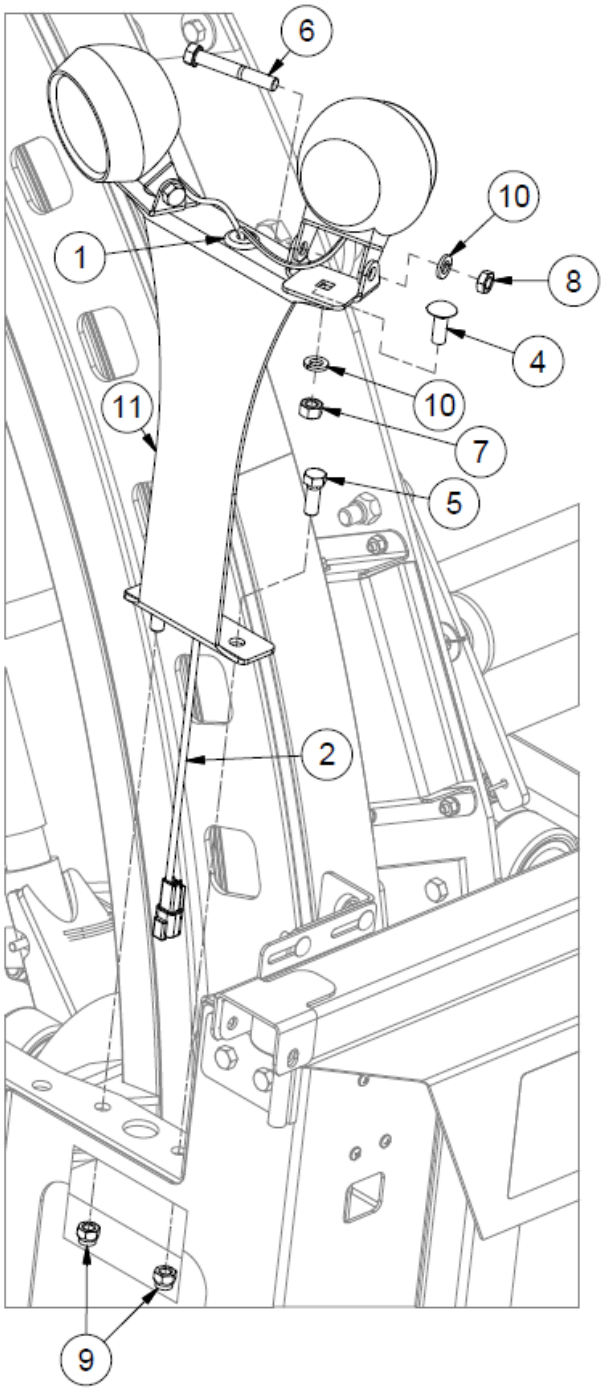

TLNWLK-ECV - Night Light Kit

ITEM	QTY	PART NUMBER	DESCRIPTION	NOTE
1	4	30862	Grommet for Night Lights	
2	1	43619	TLNWLK-ECV Twin Harness	Incl. Lights
3	1	43620	TLNWLK-ECV Single Harness	Incl. Light
4	3	CB 3/8-16 X1 Z5	Carriage Bolt - 3/8-16 x 1” Grade 5 Zinc	
5	4	HB 3/8-16X1 Z5	Hex Bolt 3/8-16x1 Grade 5 Zinc Plated Hex Cap Screw	
6	3	HB 3/8-24X2.5 Z5	Hex Bolt 3/8-24x2 1/2 Grade 5 Zinc Plated Hex Cap Screw	
7	3	HN 3/8	Hex Nut 3/8”-16 Grade 5 Zinc Plated Finished	
8	3	HN 3/8 JAM	Hex Nut - 3/8-24 Zinc Plated Hex Jam Nut	
9	4	LN 3/8 N	LN 3/8-16 Zinc Plated Nylon Insert Lock Nut	
10	6	LW 3/8	LW - 3/8” Zinc Plated Medium Split	
11	2	TL5X2-100-201	Light Bracket	

TLNWLKLED-ECV Night Light Kit

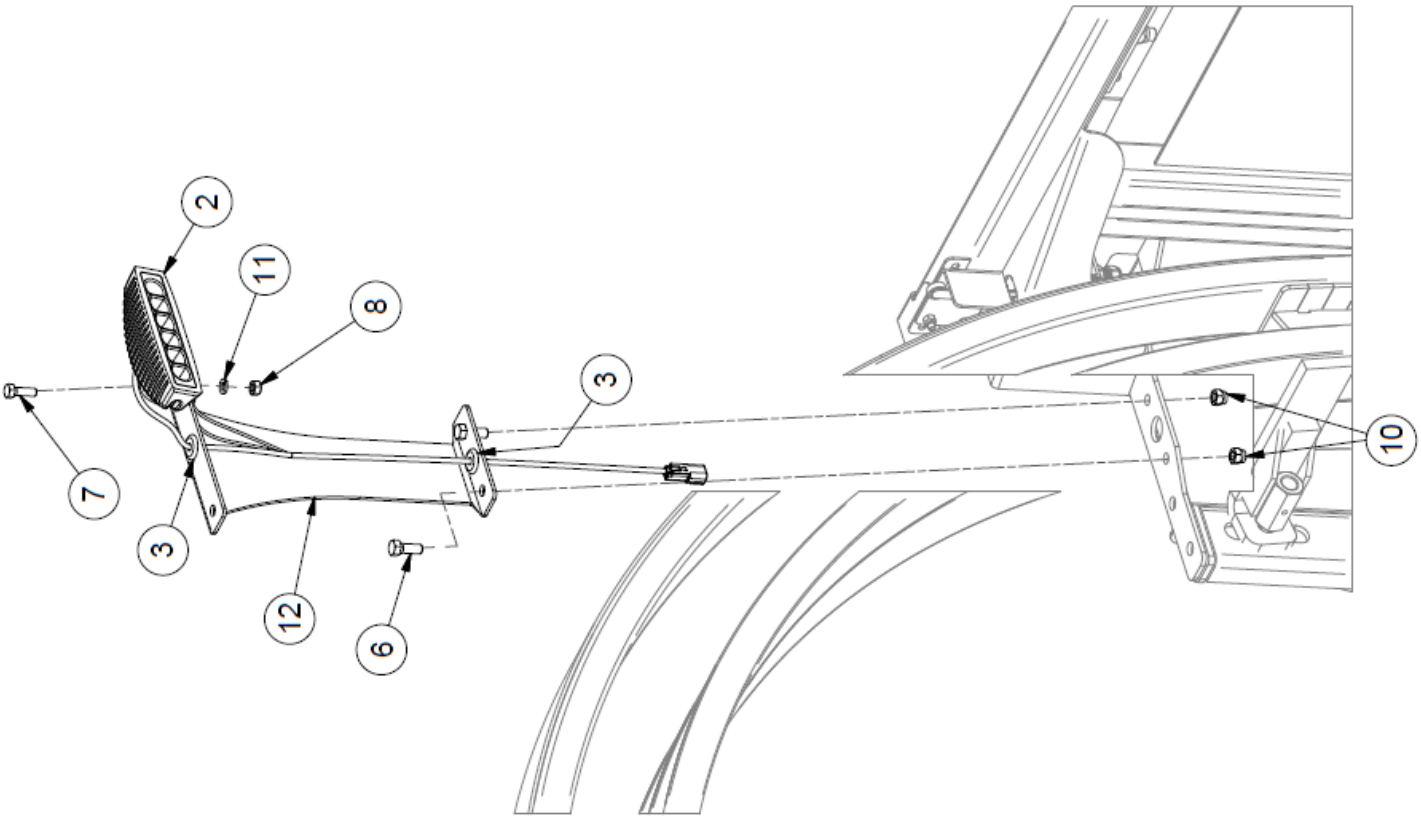

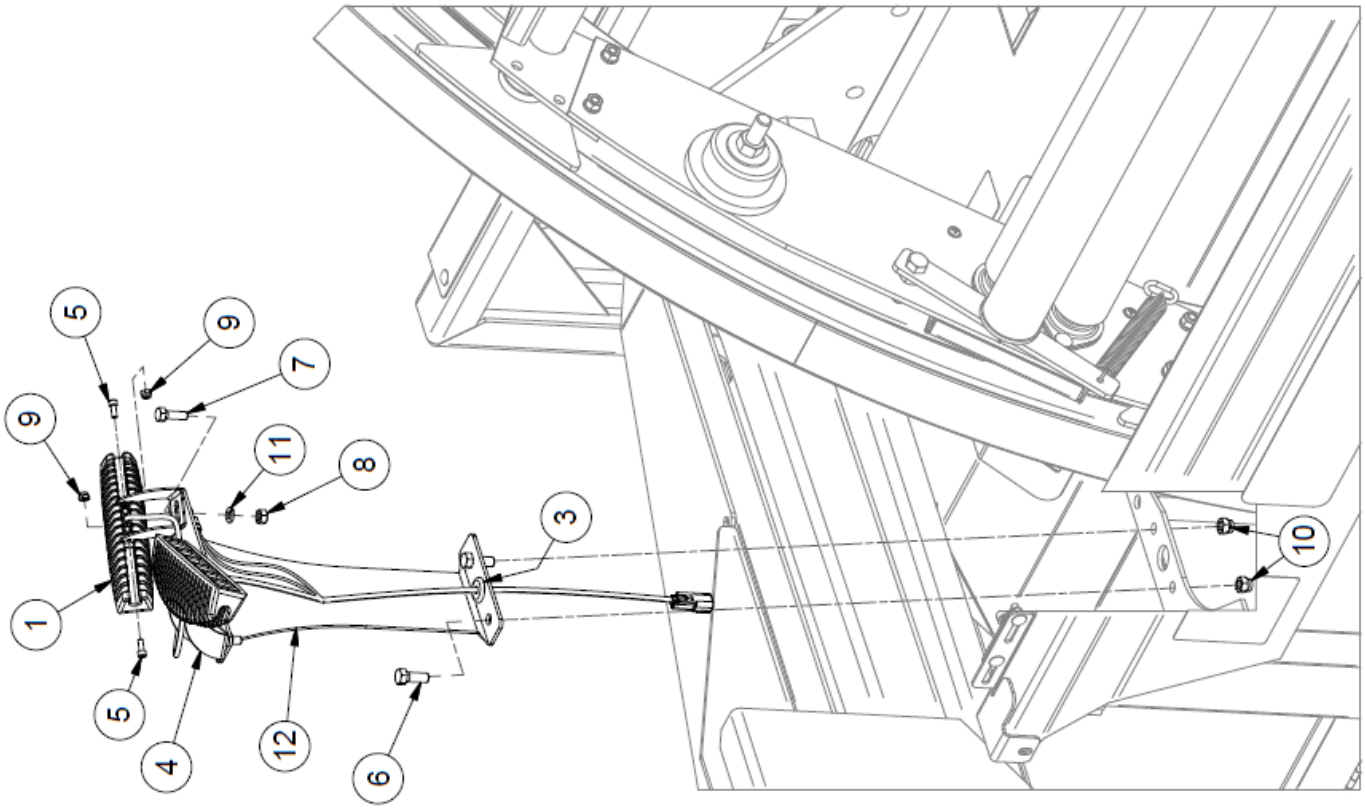

TLNLWKLED-ECV Night Light Kit

ITEM	QTY	PART NUMBER	DESCRIPTION	NOTE
1	1	43617	TLNWLKLED-ECV Twin Harness	Incl. Lights
2	1	43618	TLNWLKLED-ECV Single Harness	Incl. Light
3	4	30862	Grommet for Night Lights	
4	3	33223	LED Light Bracket	
5	6	HB #10-32X.5 SHCS	Hex Bolt - 10-32 x 1/2 Socket Head Cap Screw	
6	4	HB 3/8-16X1 Z5	Hex Bolt 3/8-16x1 Grade 5 Zinc Plated Hex Cap Screw	
7	3	HB 5/16-18X1 Z5	Hex Bolt 5/16-18x1 Grade 5 Zinc Plated Hex Cap Screw	
8	3	HN 5/16	Hex Nut 5/16”-18 Grade 5 Zinc Plated Finished	
9	6	LN #10 F	Center Locknuts (10-32) 2-Way Fine Thread	
10	4	LN 3/8 N	LN 3/8-16 Zinc Plated Nylon Insert Lock Nut	
11	3	LW 5/16	LW - 5/16” Zinc Plated Medium Split	
12	2	TL5X2-100-201	Light Bracket	

TLGR - Guide Roller Kit

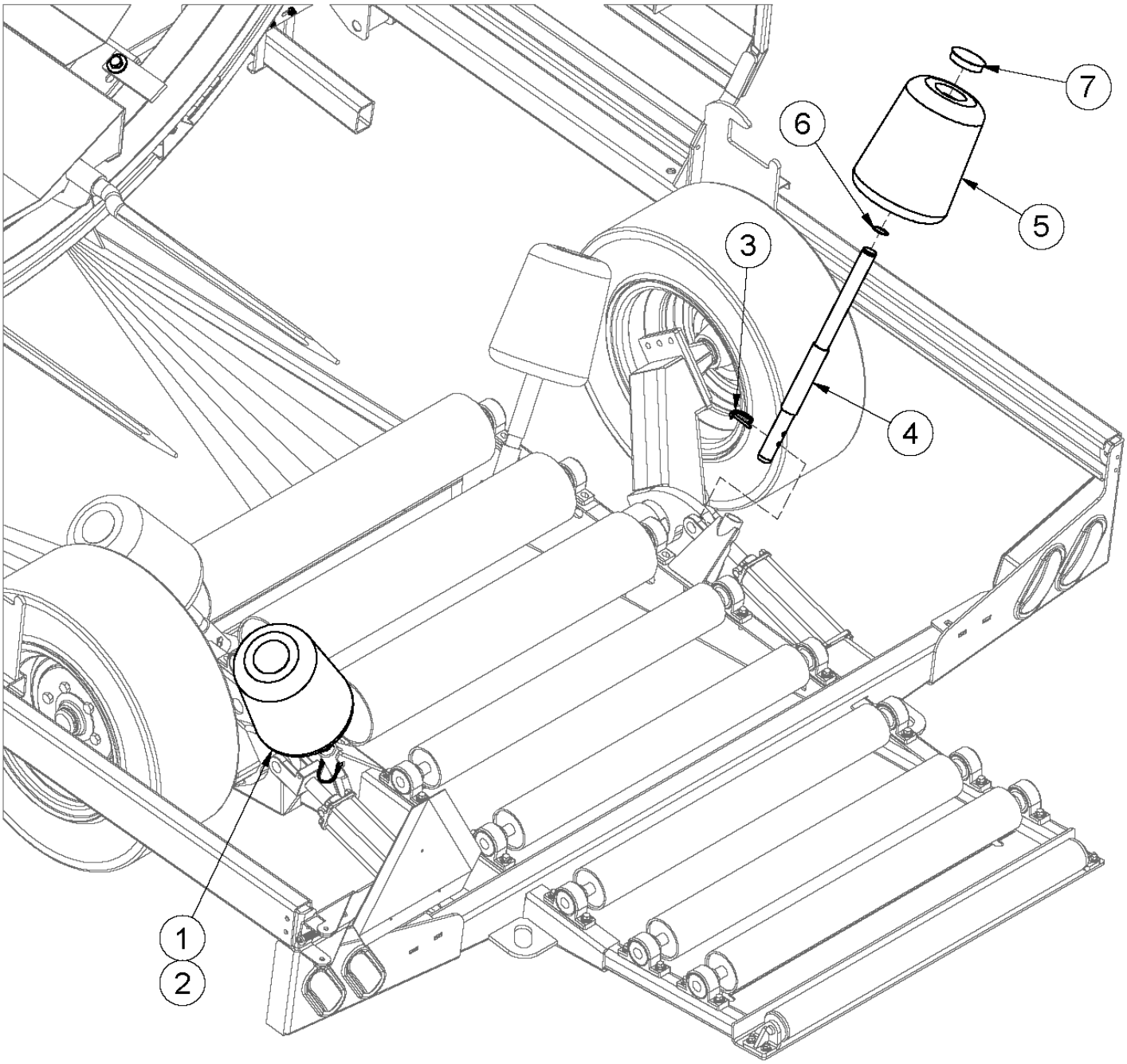

TLGR - Guide Roller

ITEM	QTY	PART NUMBER	DESCRIPTION
1	2	TLGRA	Guide Roller (Single)
2	1	TLGR	Guide Roller Kit
3	2	TL550-301-233	Lock Pin - 5/16 PTO Pin
4	2	TL550-301-239	Guide Roller Spindle
5	2	TL550-301-238	Guide Roller
6	2	RR 1.25	Retaining Ring (Spaenaur No. R3100-125)
7	2	TL245-057	Nylon Plug 3”

TLGSECV - Laser Guidance System

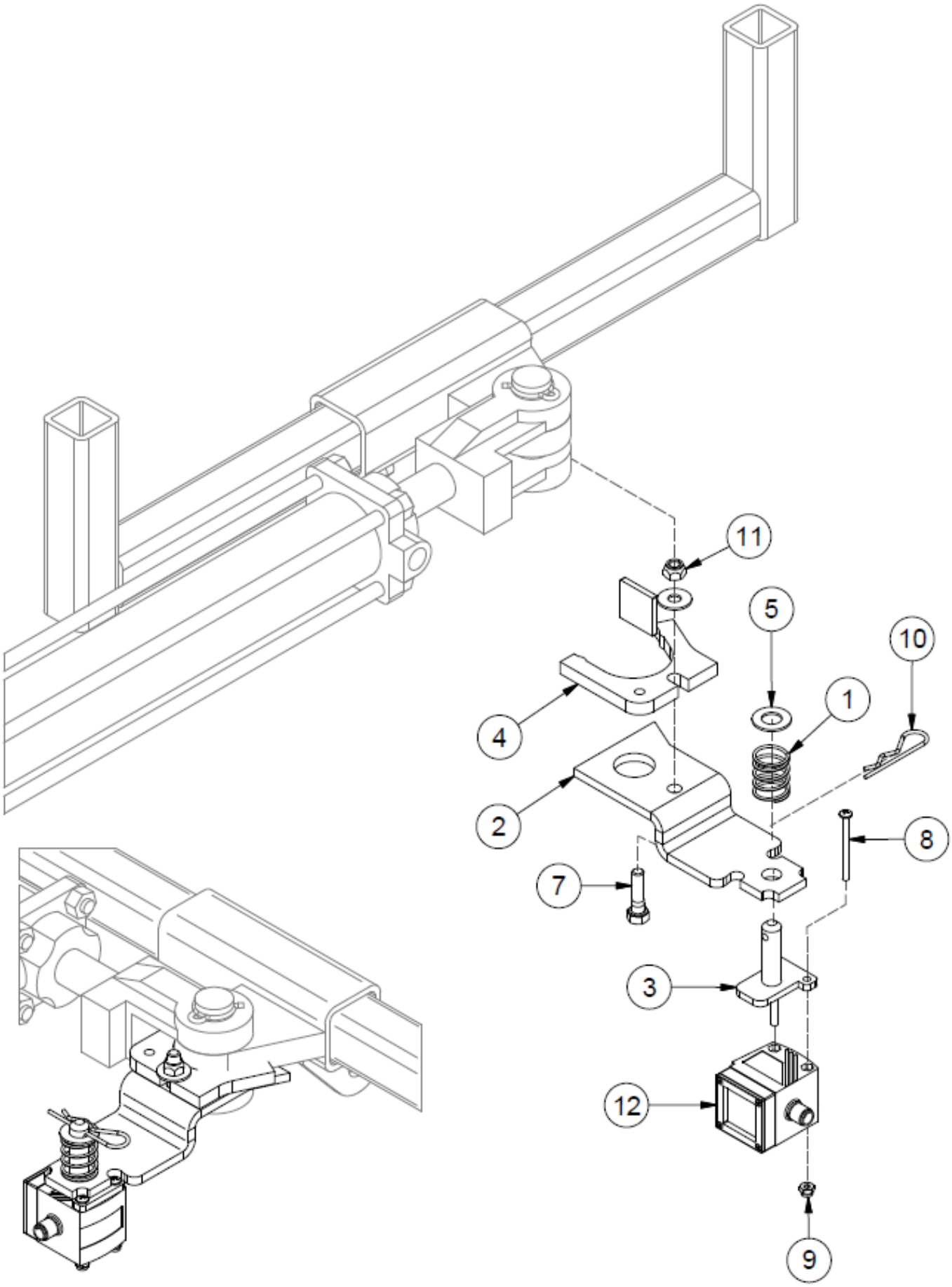

TLGSECV - Laser Guidance System

ITEM	QTY	PART NUMBER	DESCRIPTION
1	1	27566	Spring Compression .97 OD x 2.0 Long
2	1	39367	Laser Pin Bracket
3	1	39372	Pivot Bracket
4	1	40846	Stiffener Plate
5	1	FW 1/2	Flatwasher - 1/2” Zinc Plated USS (1096)
6	1	FW 5/16	Flatwasher - 5/16” Zinc Plated USS (3840)
7	1	HB 5/16-18X1.1/4 Z5	Hex Bolt - 5/16”-18 x 1 1/4” Grade 5 Zinc Plated Hex Cap Screw
8	2	HB 8-32X32 Z5	Hex Bolt - #8-32 x 2 Zinc Finish Flat Socket Cap Screw
9	2	HN 8	Hex Nut #8-32 Zinc
10	1	HP .125 X 1.5	Hair Pin
11	1	LN 5/16	Center Locknuts
12	1	39387	Sensor for Wrapper Guiding System
	1	42314	ECV Laser Guidance Wire Assembly

TLGSECV is retrofittable to pre 2018. However, it requires a software update at the manufacturer. Contact Tubeline Mfg for additional information and installation instructions to modify main wiring harness and add the alaser guidance option to the machine.

TLPSSK - Plastic Sensor Shutdown Kit

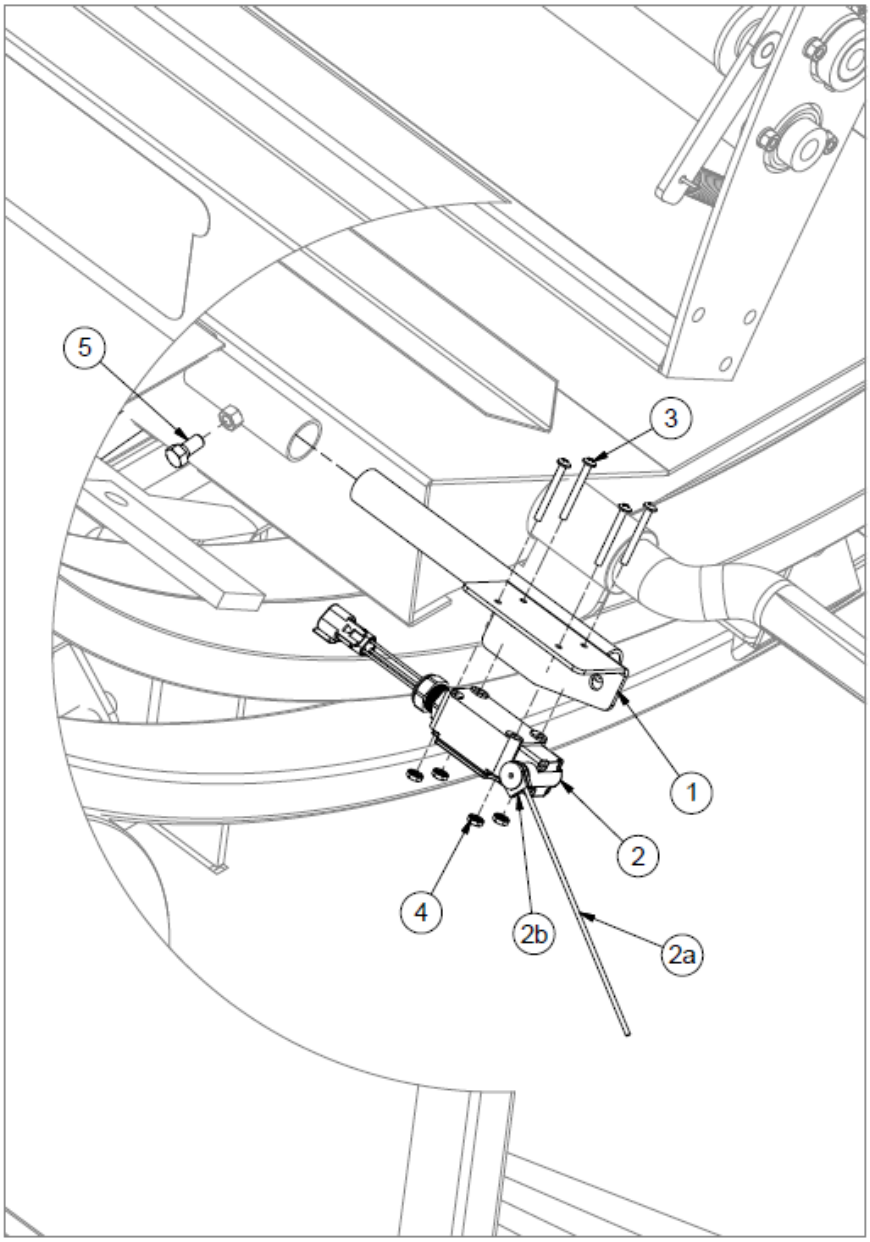

Sensor wire must be adjusted so that only one layer of plastic is covering the end of the wire while wrapping. Adjustment can be made on the bracket and on the sensor wire. The end of the sensor wire behind the switch can be bent to allow the wire in front of the switch to drop down far enough to trip the switch when no plastic is present.

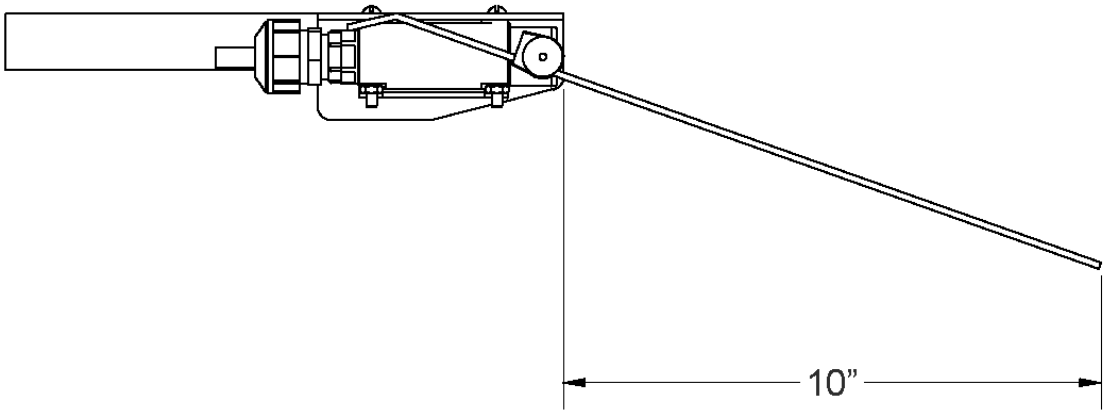

TLPSSK - Plastic Sensor Shutdown Kit

ITEM	QTY	PART NUMBER	DESCRIPTION
1	1	TLFSB2007	Film Sensor Mtg. Brkt.
2	1	32635	ECV Wrapper, Film Sensor Switch
2a	1	TL550-100-049	Wire Arm
2b	1	TL550-100-082	Wire Clamp
3	4	MS #10X24X1.75	Machine Screw - (Inch)
4	4	LN 10-24	K-Lok Locknut
5	1	HB 3/8-16X0.75 Z5	Hex Bolt 3/8-16x3/4 Grade 5 Zinc Plated Hex Cap Screw

Plastic Sensor Shutdown Kit Installation

Install film sensor bracket:

1. Locate the wire labeled film sensor (pre-wired machine).
2. Remove the plug and connect to film sensor switch.
3. Install toggle switch in the control panel.
4. Remove the jumper wire between terminal 18 & 19.
5. Connect wires from toggle switch to terminal 18 & 19.

Plastic Sensor Shutdown Kit Wire Adjustment

Use measurements as initial guide only.

1. Measure length of wire from the hoop face (see previous page).
2. 9.5” wire = approx. 3” between wraps = 8-9 layers per bale.
3. 9.5” wire should stop hoop rotation just after an empty tensioner passes the wire.
4. Lengthen wire 3” for 4 layers of wrap or 1.5” for 6 layers.
5. Shorten wire by 1.5” for 10 layers per bale.

As a guide, if the hoop stops before an empty tensioner passes the film sensor wire, the wire is **too short** and if the hoop **does not** stop with one empty tensioner the film sensor is **too long**.

TLTWK - Twin Wrap Kit

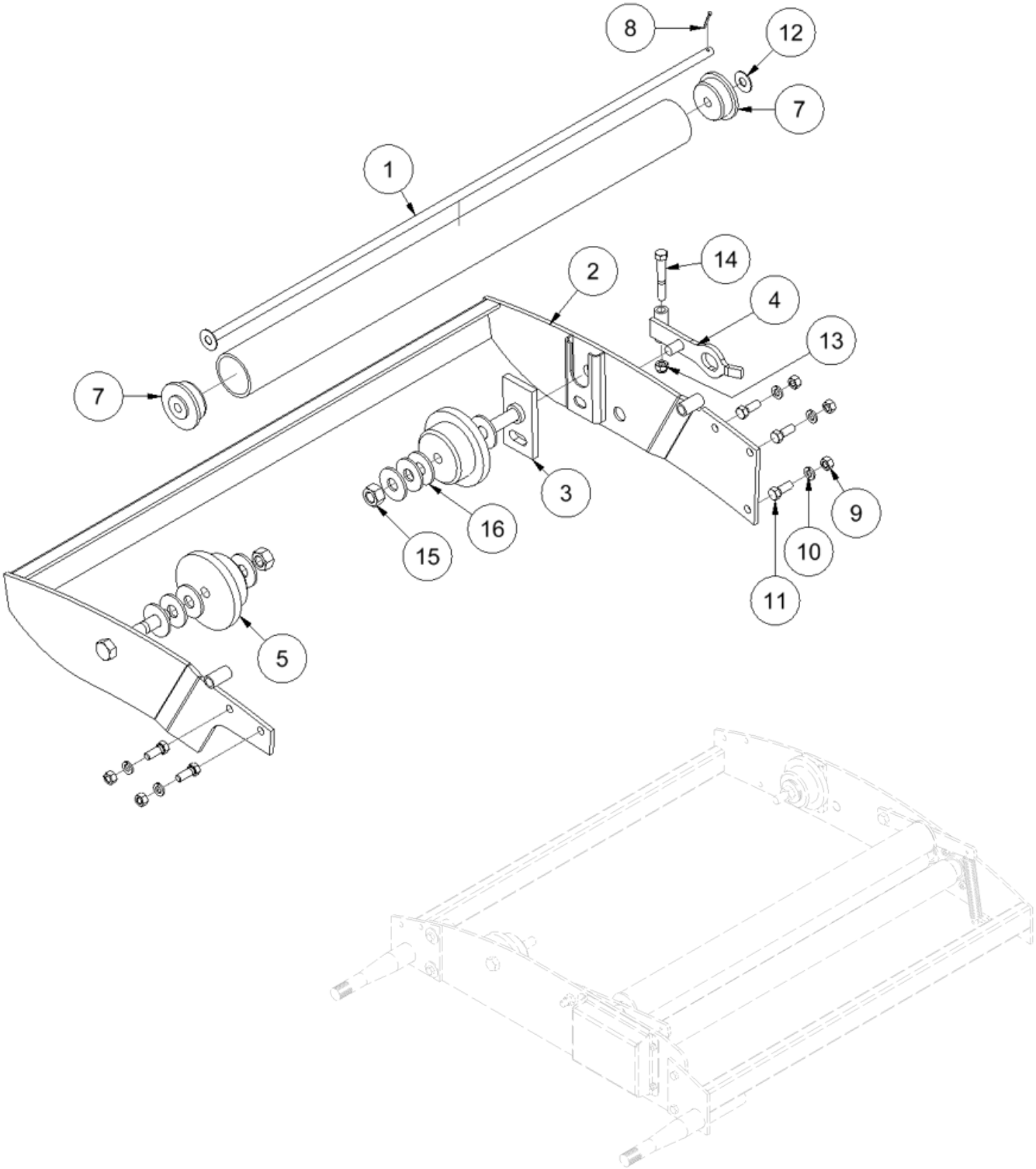

TLTWK - Twin Wrap Kit

ITEM	QTY	PART NUMBER	DESCRIPTION
		TL TWK	Twin Wrap Kit
1	1	TL TWROD	Idler Axle
2	1	TL550-200-139	Twin Wrap Frame
3	1	TL550-200-115	Spool Holder Bracket
4	1	TL550-200-103	Spool Holder Latch
5	2	TL550-200-012	Wrap Spool Holder
6	1	TL550-100-022	Plastic Idler
7	2	TL500-100-021	Idler End Caps
8	1	CP 18X1	Pin, Cotter 1/8 x 1.0
9	5	HN 3/8	Hex Nut 3/8”-16 Grade 5 Zinc Plated Finished NC
10	5	LW 3/8	Lockwasher - 3/8” Zinc Plated Medium Split
11	5	HB 3/8-16X1.0 Z5	Hex Bolt 3/8-16 x 1” Grade 5 Zinc Plated Hex Cap Screw NC
12	2	FW 7/16	Flatwasher - 7/16” Zinc Plated USS
13	1	LN 3/8 N	Locknuts - 3/8-16 Zinc Plated Nylon Insert Lock Nut
14	1	HB 3/8-16X2.1/2 Z5	Hex Bolt 3/8”-16 x 2-1/2” Grade 5 Zinc Plated Hex Cap Screw NC
15	2	HN 5/8	Hex Nut - 5/8”-11 Grade 5 Zinc Plated Finished NC
16	8	FW 5/8	Flatwasher - 5/8” Zinc Plated USS

TLMPO-5000 - Dispatch Arm

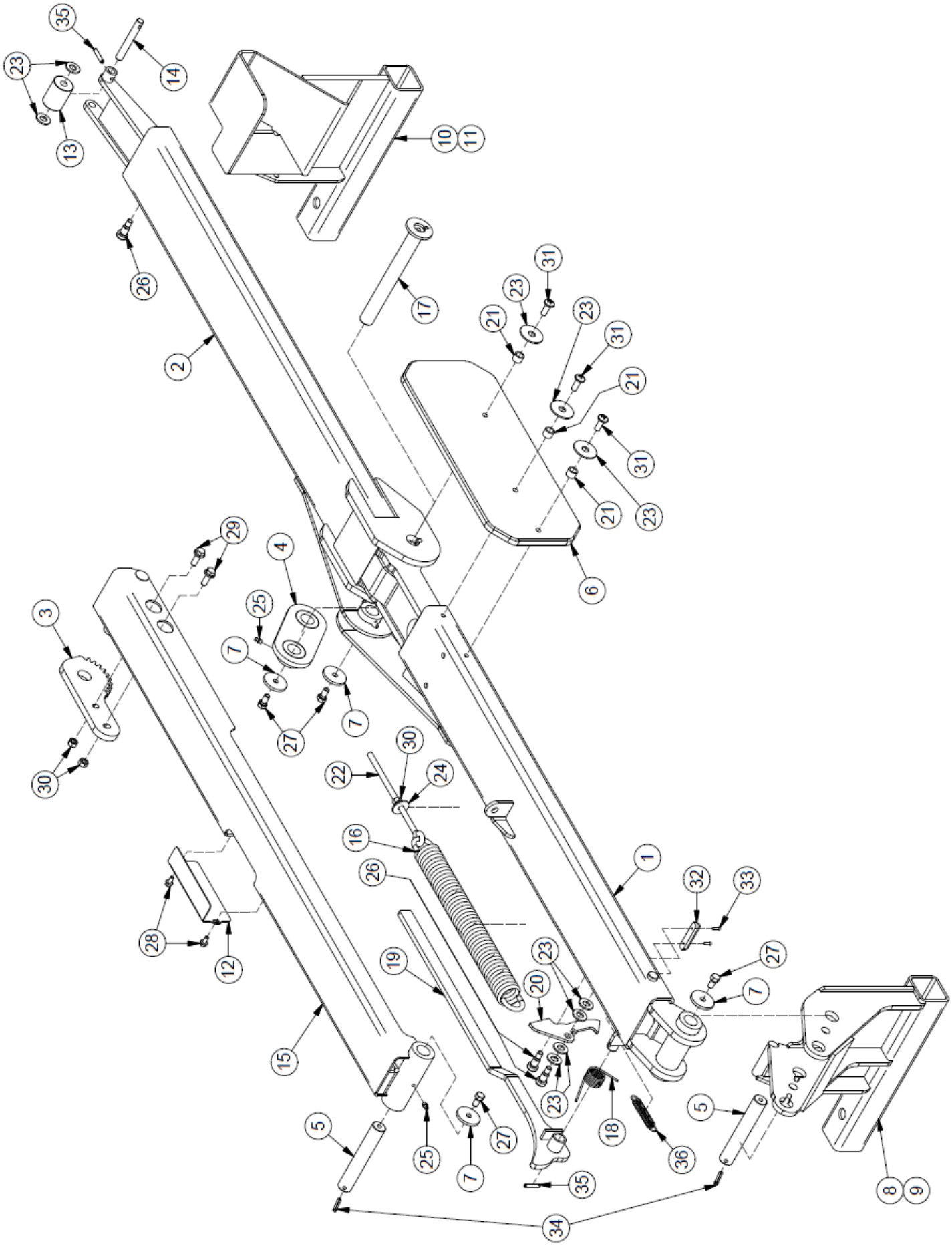

TLMPO-5000 - Dispatch Arm

ITEM	QTY	PART NUMBER	DESCRIPTION	SERIAL BREAK
1	1	31186	Folding Pushoff Left Arm	
2	1	31188	Folding Pushoff Right Arm	
3	1	31192	Top Pushoff Arm Sprocket	
4	1	31300	Folding Pushoff Arm Link	
5	2	31301	Pushoff Pin	
6	1	31302	Rubber Pushoff Pin	
7	4	31303	Pin Endcap	
8	1	31309	Folding Pushoff Left Base	Up to 16R234
9	1	39697	5000 Pushoff Left Side	16R236 to Current
10	1	31312	Folding Pushoff Right Base	Up to 16R234
11	1	39696	Large Hoop Pocket (Weldment)	16R236 to Current
12	1	31367	Spring Tension Access Cover	
13	1	31369	Last Pushoff Roller	
14	1	31385	Pushoff Roller Pivot Pin	
15	1	31388	Folding Pushoff Guide Arm	
16	1	31395	Tension Spring	
17	1	31535	Pushoff	
18	1	33230	Torsion Spring	
19	1	33231	Folding Pushoff Handle	
20	1	36690	Folding Pushoff Latch	
21	3	36942	Rubber Plate Spacer	
22	1	EB3/8-16X6.0	Eye Bolt - 3/8-16 x 6" Shank Zinc Plated Turned	
23	9	FW 1/2	Flatwasher - 1/2" Zinc Plated USS	
24	1	FW 3/8	Flatwasher - 3/8" Zinc Plated USS	
25	7	GR 1/4 X 28	Grease Fitting 1/4-28 Strght-Standrd Zerk	
26	3	HB 1/2X5/8 SS	Socket Head Shoulder Screws - 1/2 Shldr x 5/8 x 3/8-16	
27	4	HB 3/8-16X0.75 Z5	Hex Bolt 3/8-16x3/4 Grade 5 Zinc Plated Hex Cap Screw	
28	2	HBC1/4X0.5	Hex Bolt Cerrated 1/4-20 x 1/2 Zinc Flange Bolt	
29	2	HBC3/8X1	Hex Bolt Cerrated 3/8-16 x 1 Zinc Flange Bolt	
30	4	HN 3/8	Hex Nut 3/8"-16 Grade 5 Zinc Plated Finished	
31	3	MS 3/8X16X1	Machine Screw - (Inch)	
32	1	PP00685	Rubber Stop	
33	2	PP00686	Wood Screw, #6 x 5/8"	
34	2	RP 1/4 x 1 1/2	Pin - Roll Pin 1/4 x 1 1/2	
35	2	RP 1/4 x 1 1/4	Pin - Roll Pin 1/4 x 1 1/4	
36	1	TL550-100-069	Throttle Spring	

Imperial Torque Values

UNIFIED INCH BOLT AND CAP SCREW TORQUE VALUES

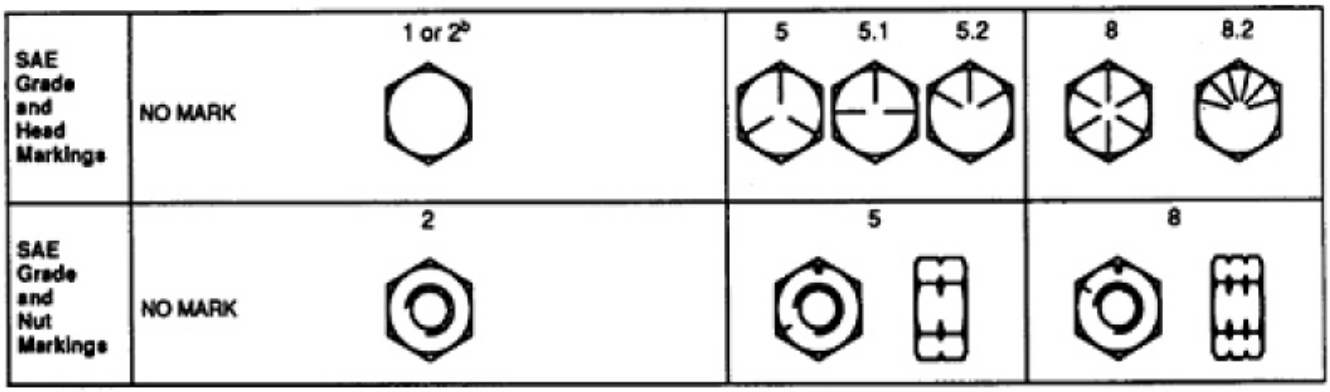

Size	Grade 1				Grade 2[b]				Grade 5, 5.1, or 5.2				Grade 8 or 8.2			
	Lubricated[a]		Dry[a]		Lubricated[a]		Dry[a]		Lubricated[a]		Dry[a]		Lubricated[a]		Dry[a]	
	N·m	lb-ft	N·m	lb-ft	N·m	lb-ft	N·m	lb-ft	N·m	lb-ft	N·m	lb-ft	N·m	lb-ft	N·m	lb-ft
1/4	3.7	2.8	4.7	3.5	6	4.5	7.5	5.5	9.5	7	12	9	13.5	10	17	12.5
5/16	7.7	5.5	10	7	12	9	15	11	20	15	25	18	28	21	35	26
3/8	14	10	17	13	22	16	27	20	35	26	44	33	50	36	63	46
7/16	22	16	28	20	35	26	44	32	55	41	70	52	80	58	100	75
1/2	33	25	42	31	53	39	67	50	85	63	110	80	120	90	150	115
9/16	48	36	60	45	75	56	95	70	125	90	155	115	175	130	225	160
5/8	67	50	85	62	105	78	135	100	170	125	215	160	240	175	300	225
3/4	120	87	150	110	190	140	240	175	300	225	375	280	425	310	550	400
7/8	190	140	240	175	190	140	240	175	490	360	625	450	700	500	875	650
1	290	210	360	270	290	210	360	270	725	540	925	675	1050	750	1300	975
1-1/8	400	300	510	375	400	300	510	375	900	675	1150	850	1450	1075	1850	1350
1-1/4	570	425	725	530	570	425	725	530	1300	950	1650	1200	2050	1500	2600	1950
1-3/8	750	550	950	700	750	550	950	700	1700	1250	2150	1550	2700	2000	3400	2550
1-1/2	1000	725	1250	925	990	725	1250	930	2250	1650	2850	2100	3600	2650	4550	3350

DO NOT use these values if a different torque value or tightening procedure is given for a specific application. Torque values listed are for general use only. Check tightness of fasteners periodically.

Shear bolts are designed to fail under predetermined loads. Always replace shear bolts with identical grade.

Fasteners should be replaced with the same or higher grade. If higher grade fasteners are used, these should only be tightened to the strength of the original.

Make sure fasteners threads are clean and that you properly start thread engagement. This will prevent them from failing when tightening.

Tighten plastic insert or crimped steel-type lock nuts to approximately 50 percent of the dry torque shown in the chart, applied to the nut, not to the bolt head. Tighten toothed or serrated-type lock nuts to the full torque value.

[a] "Lubricated" means coated with a lubricant such as engine oil, or fasteners with phosphate and oil coatings. "Dry" means plain or zinc plated without any lubrication.

[b] Grade 2 applies for hex cap screws (not hex bolts) up to 152 mm (6-in.) long. Grade 1 applies for hex cap screws over 152 mm (6-in.) long, and for all other types of bolts and screws of any length.

DX,TOR01 -19-20JUL94

Metric Torque Values

METRIC BOLT AND CAP SCREW TORQUE VALUES

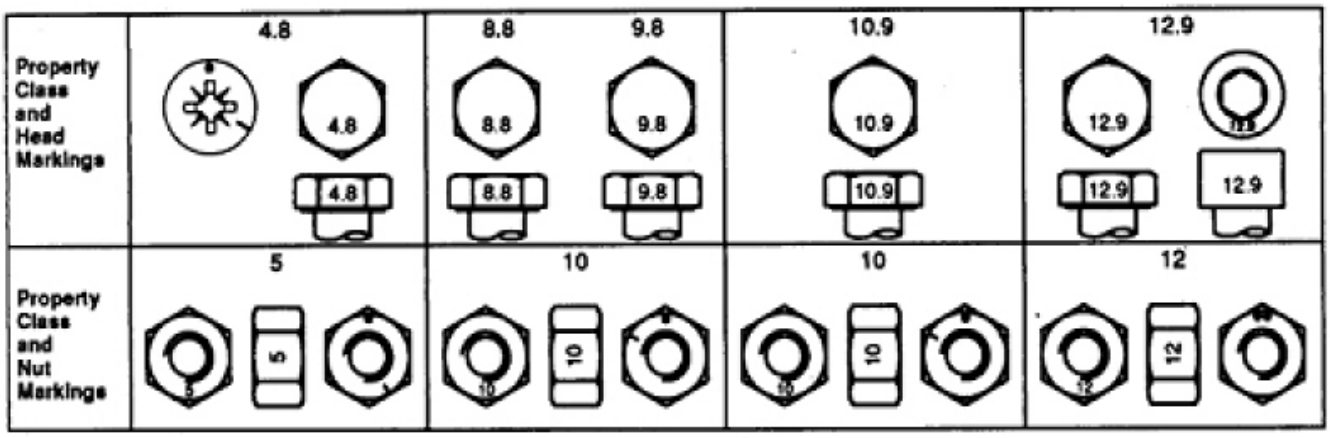

Size	Class 4.8				Class 8.8 or 9.8				Class 10.9				Class 12.9			
	Lubricated[a]		Dry[a]		Lubricated[a]		Dry[a]		Lubricated[a]		Dry[a]		Lubricated[a]		Dry[a]	
	N·m	lb-ft	N·m	lb-ft	N·m	lb-ft	N·m	lb-ft	N·m	lb-ft	N·m	lb-ft	N·m	lb-ft	N·m	lb-ft
M6	4.8	3.5	6	4.5	9	6.5	11	8.5	13	9.5	17	12	15	11.5	19	14.5
M8	12	8.5	15	11	22	16	28	20	32	24	40	30	37	28	47	35
M10	23	17	29	21	43	32	55	40	63	47	80	60	75	55	95	70
M12	40	29	50	37	75	55	95	70	110	80	140	105	130	95	165	120
M14	63	47	80	60	120	88	150	110	175	130	225	165	205	150	260	190
M16	100	73	125	92	190	140	240	175	275	200	350	255	320	240	400	300
M18	135	100	175	125	260	195	330	250	375	275	475	350	440	325	560	410
M20	190	140	240	180	375	275	475	350	530	400	675	500	625	460	800	580
M22	260	190	330	250	510	375	650	475	725	540	925	675	850	625	1075	800
M24	330	250	425	310	650	475	825	600	925	675	1150	850	1075	800	1350	1000
M27	490	360	625	450	950	700	1200	875	1350	1000	1700	1250	1600	1150	2000	1500
M30	675	490	850	625	1300	950	1650	1200	1850	1350	2300	1700	2150	1600	2700	2000
M33	900	675	1150	850	1750	1300	2200	1650	2500	1850	3150	2350	2900	2150	3700	2750
M36	1150	850	1450	1075	2250	1650	2850	2100	3200	2350	4050	3000	3750	2750	4750	3500

DO NOT use these values if a different torque value or tightening procedure is given for a specific application. Torque values listed are for general use only. Check tightness of fasteners periodically.

Shear bolts are designed to fail under predetermined loads. Always replace shear bolts with identical property class.

Fasteners should be replaced with the same or higher property class. If higher property class fasteners are used, these should only be tightened to the strength of the original.

[a] "Lubricated" means coated with a lubricant such as engine oil, or fasteners with phosphate and oil coatings. "Dry" means plain or zinc plated without any lubrication.

Make sure fasteners threads are clean and that you properly start thread engagement. This will prevent them from failing when tightening.

Tighten plastic insert or crimped steel-type lock nuts to approximately 50 percent of the dry torque shown in the chart, applied to the nut, not to the bolt head. Tighten toothed or serrated-type lock nuts to the full torque value.

DX,TORQ2 -19-20JUL94

Index

Imperial Torque Values . . . VI
Metric Torque Values. . . . VII
Parts Manual . . . II
Serial Number Decal. . . . III
Warranty and Limitation of Liability . . . II
Section 1 : Safety Decals . . . 1-1
Safety Decal Illustrations . . . 1-3
Safety Decal Locations . . . 1-1
Section 2: Parts Lists . . . 2-1
13 hp Engine . . . 2-44
20 hp Engine . . . 2-46
Axle-Spindle-Hub . . . 2-24
Cylinder Supports . . . 2-22
Film Snap . . . 2-48
Filter Cross Reference . . . 2-41
Front Axle . . . 2-26
Front Corner - Steering . . . 2-28
Front Pushoff . . . 2-8
Gas Tank - Fenders . . . 2-38
Gas Tank - Fenders - Original . . . 2-36
Hoop Brace - Current . . . 2-16
Hoop Brace - Original . . . 2-14
Hoop - Current . . . 2-4
Hoop Drive . . . 2-12
Hoop - Original . . . 2-2
Oil Tank . . . 2-40
Plastic Wrap Carrier . . . 2-6
Ram . . . 2-10
Rear Axle & Roller Bed . . . 2-32
Rear Corners . . . 2-30
Safety Guard - Current . . . 2-20
Safety Guard - Original . . . 2-18
Throttle Linkage . . . 2-42
TL109-100-360 - Brake Assembly . . . 2-34
Section 3: Hydraulics . . . 3-1
Front Circuits . . . 3-2
Manifold Ports . . . 3-6
Manifold Valves . . . 3-8
Rear Circuits . . . 3-4
Section 4: Electrical . . . 4-1
Battery . . . 4-4
Control Panel . . . 4-6
Main Electrical Harness . . . 4-2

Table Trigger 4-8
Section 5: Optional Features 5-1
Dual Power Drive Assembly 5-6
Plastic Sensor Shutdown Kit Installation. 5-21
Plastic Sensor Shutdown Kit Wire Adjustment 5-21
Power Drive Manifold Ports 5-8
Power Drive Manifold Valves 5-10
Single Power Drive Assembly 5-6
TLGR - Guide Roller Kit. 5-16
TLGSECV - Laser Guidance System. 5-18
TLHPD5000ECV - Single Power Drive 5-2
TLHPDD5000ECV - Dual Power Drive Hydraulics 5-4
TLMPO-5000 - Dispatch Arm 5-24
TLNWLK-ECV - Night Light Kit 5-12
TLNWLKLED-ECV Night Light Kit 5-14
TLPSSK - Plastic Sensor Shutdown Kit 5-20
TLTWK - Twin Wrap Kit 5-22

WARNING

The engine exhaust from this product contains chemicals known in the state of California to cause cancer, birth defects, or other reproductive harm.

TUBE•LINE™
MANUFACTURING LTD